ELECTRONICS-II

Power Amplifiers

Chapter 01, 02

Functional blocks of an amplifier

- All power amplifiers have:

1. A Power SUPPLY

2. An INPUT stage

3. An OUTPUT stage

1. Power Supply

- The primary purpose of a power supply in a power amplifier is to take the 120 V AC power from the outlet and convert it to a DC voltage.

- The very best of amplifiers have two totally independent power supplies, one for each channel (they do share a common AC power cord though).

2. Input Stage

- The general purpose of the input stage of a power amplifier (sometimes called the "front end") is to receive and prepare the input signals for "amplification" by the output stage.

- Two types:

  1. Balanced Input
  2. Single Ended Input

2. Input Stage

- **Balanced inputs** are much preferred over **single ended inputs** when interconnection cables are long and/or subject to noisy electrical environments because they provide very good *noise rejection*.

- The input stage also contains things like input level controls.

3.OUTPUT Stage

- The portion which actually converts the weak input signal into a much more powerful "replica" which is capable of driving high power to a speaker.
- This portion of the amplifier typically uses a number of "power transistors" (or MOSFETs) and is also responsible for generating the most **heat** in the unit.
- The output stage of an amplifier interfaces to the speakers.

Amplifier Classes

- The **Class** of an amplifier refers to the design of the circuitry within the amp.

- For audio amplifiers, the **Class of amp refers to the output stage of the amp.**

Basic Power Amplifier Output Stage
(Source-Follower MOSFET Configuration)

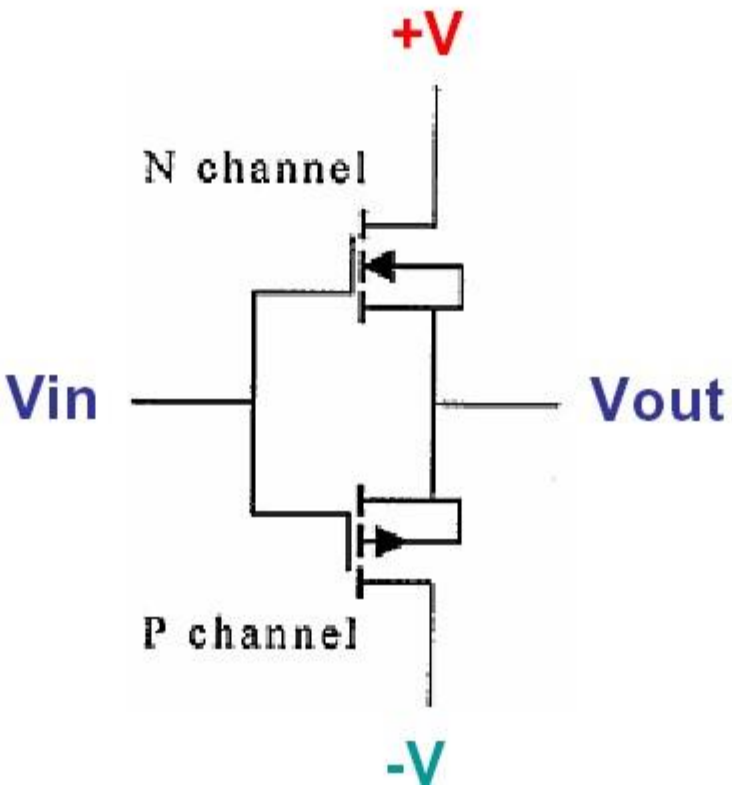

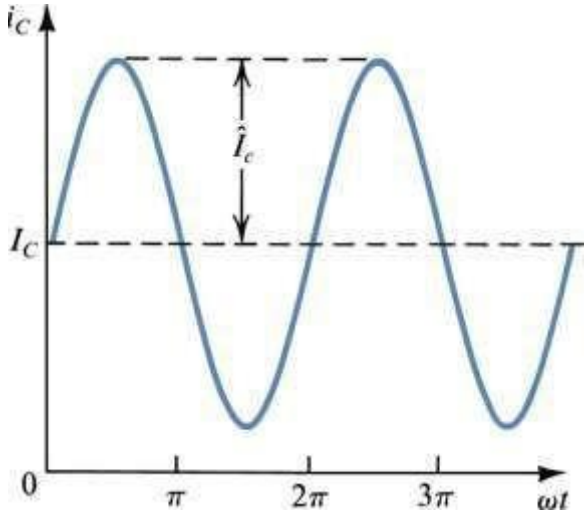

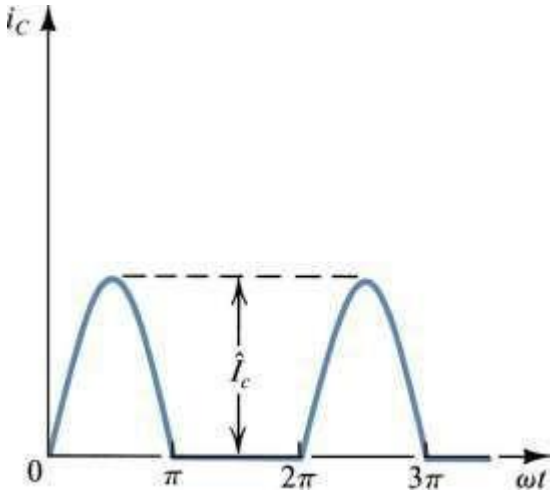

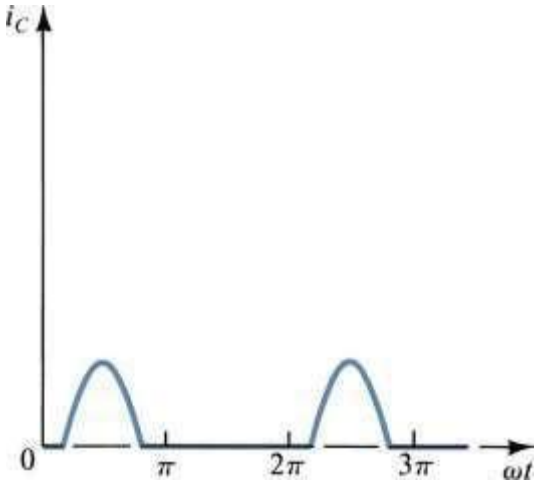

Classes

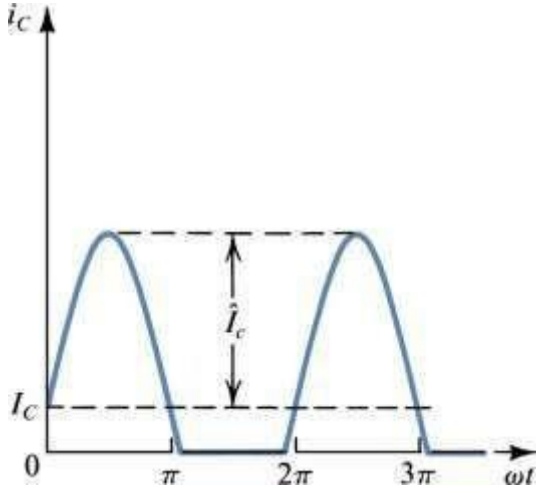

Collector current waveforms for transistors operating in (a) class A, (b) class B, (c) class AB, and (d) class C amplifier stages.

- **Class-A:** Output device(s) conduct through 360 degrees of input cycle (never switch off) - A single output device is possible. The device conducts for the entire waveform in Figure 1

- **Class-B:** Output devices conduct for 180 degrees (1/2 of input cycle) - for audio, two output devices in "push-pull" must be used (see Class-AB)

- **Class-AB:** Halfway (or partway) between the above two examples (181 to 200 degrees typical) - also requires push-pull operation for audio. The conduction for each output device is shown in Figure 1.

- **Class-C:** Output device(s) conduct for less than 180 degrees (100 to 150 degrees typical) - Radio Frequencies only - cannot be used for audio! This is the sound heard when one of the output devices goes open circuit in an audio amp! See Figure 1, showing the time the output device conducts

Power Amplifier Classes – "A"

- Class "A"
  - key ingredient of class A operation is that output device is always on
  - single-ended design with only one type polarity output device
  - the most inefficient of all power amplifier designs, averaging only around 20% (large, heavy, and run very hot)
  - are inherently the most linear, with the least amount of distortion

Class A Output Stage

- Class A output stage is a simple linear current amplifier.
- It is also very inefficient, typical maximum efficiency between 10 and 20 %.
- Only suitable for low power applications.
- High power requires much better efficiency.

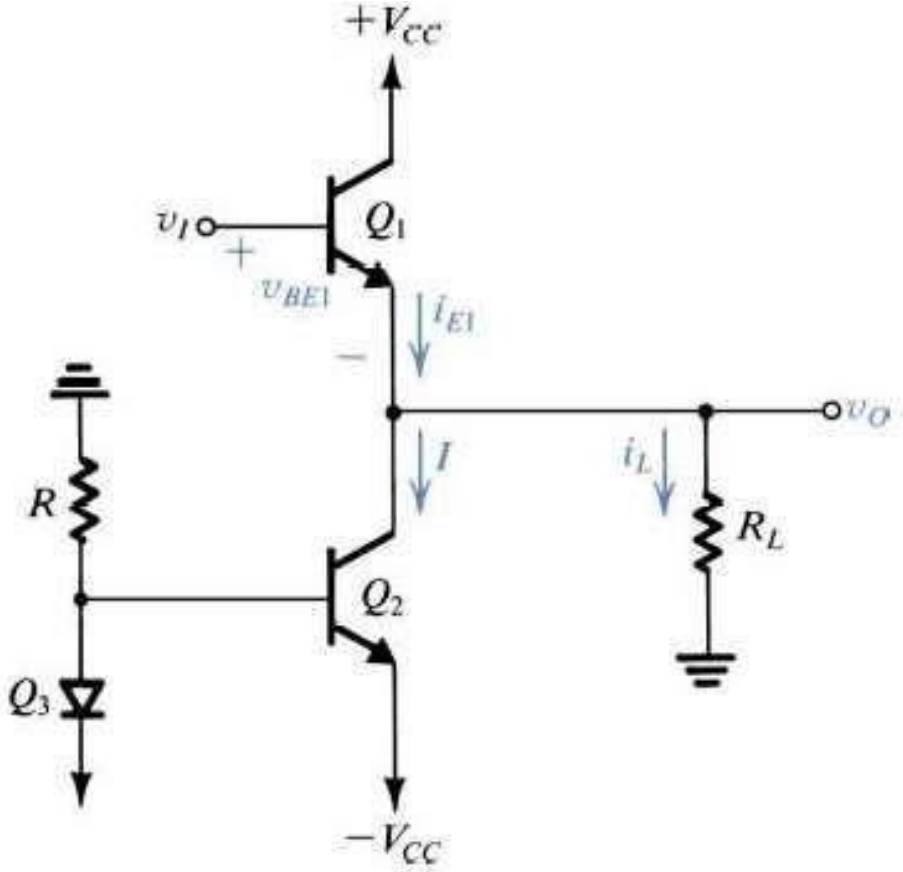

An emitter follower (Q_1) biased with a constant current I supplied by transistor Q_2.

Transfer Characteristics

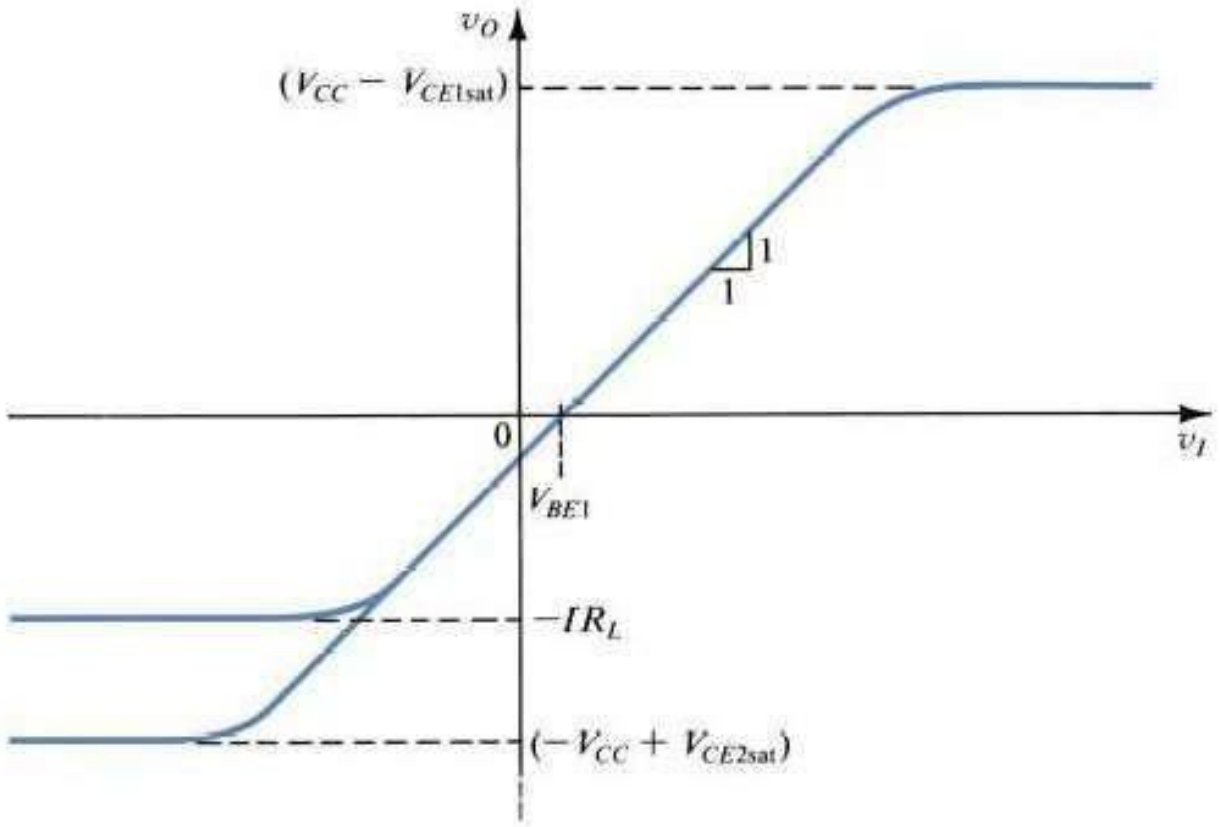

Transfer characteristic of the emitter follower. This linear characteristic is obtained by neglecting the change in v_{BE1} with i_L. The maximum positive output is determined by the saturation of Q_1. In the negative direction, the limit of the linear region is determined either by Q_1 turning off or by Q_2 saturating, depending on the values of I and R_L.

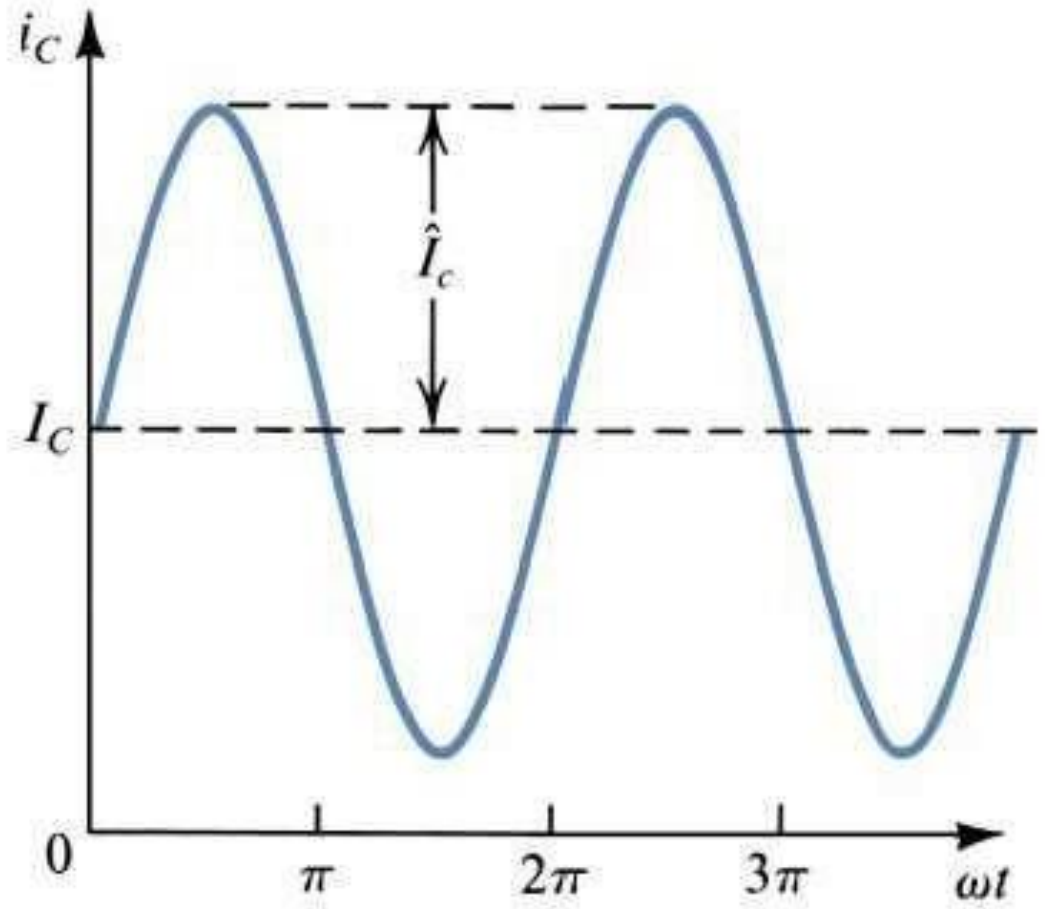

Collector current waveforms for transistors operating in class A amplifier stage

Basic class A amplifier operation. Output is shown 180∞ out of phase with the input (inverted).

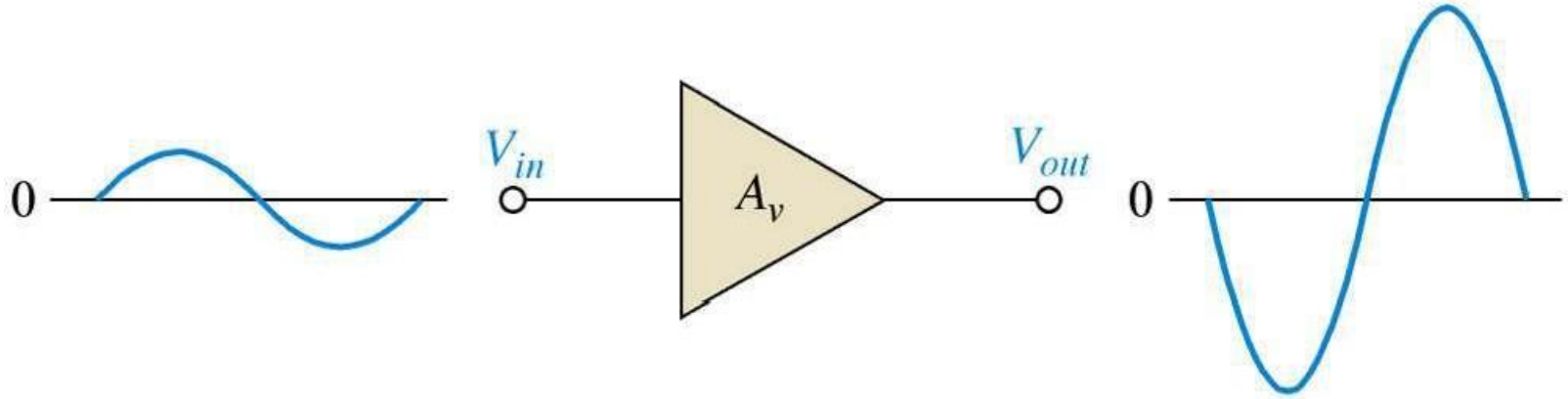

Maximum class A output occurs when the Q-point is centered on the ac load line.

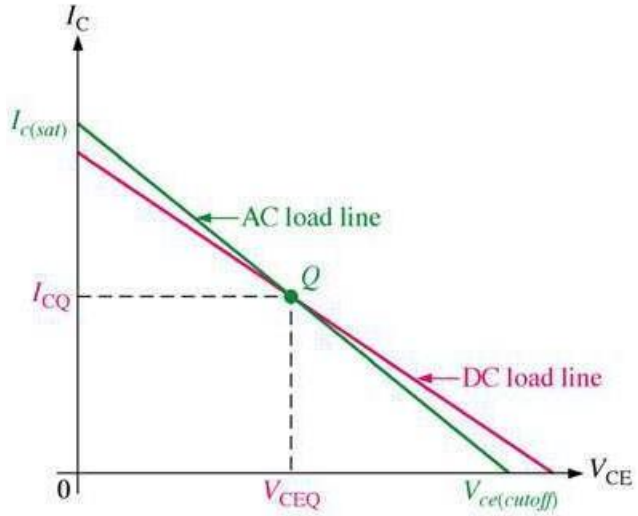

(a)

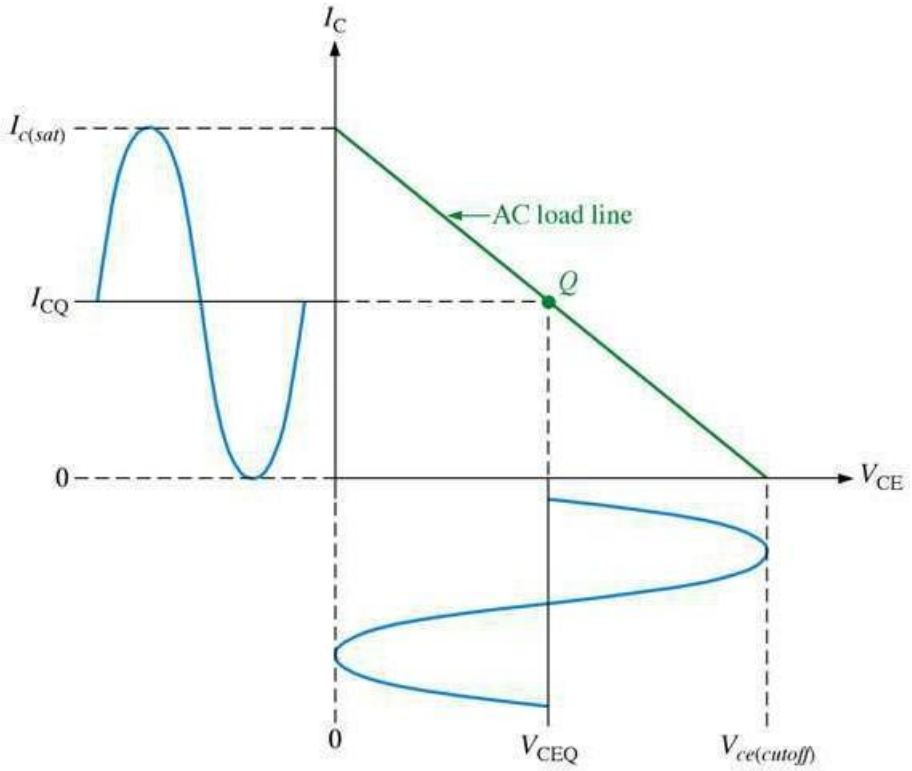

(b)

Q-point closer to cutoff.

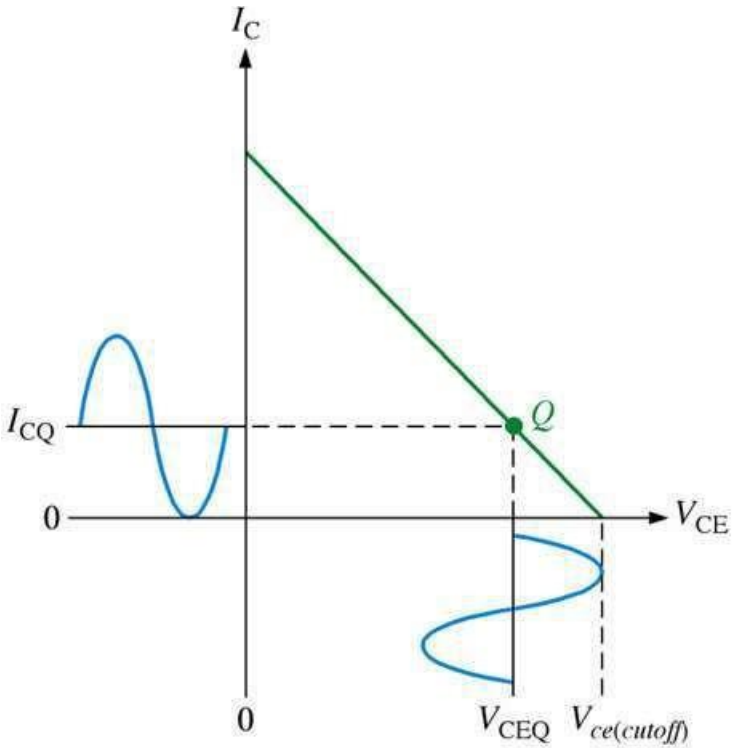

(a) Amplitude of V_{ce} and I_c limited by cutoff

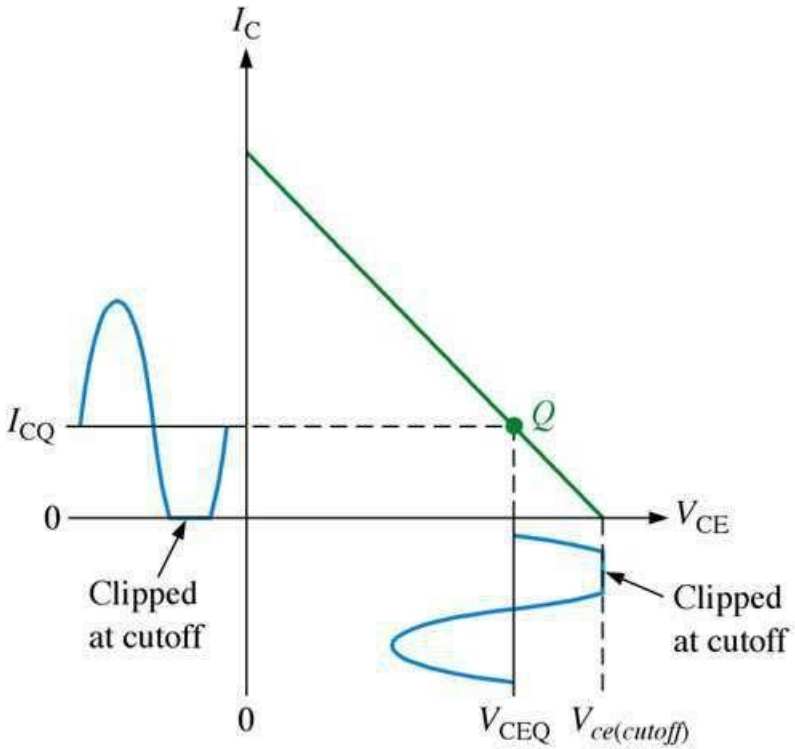

(b) Transistor driven into cutoff by a further increase in input amplitude

Q-point closer to saturation.

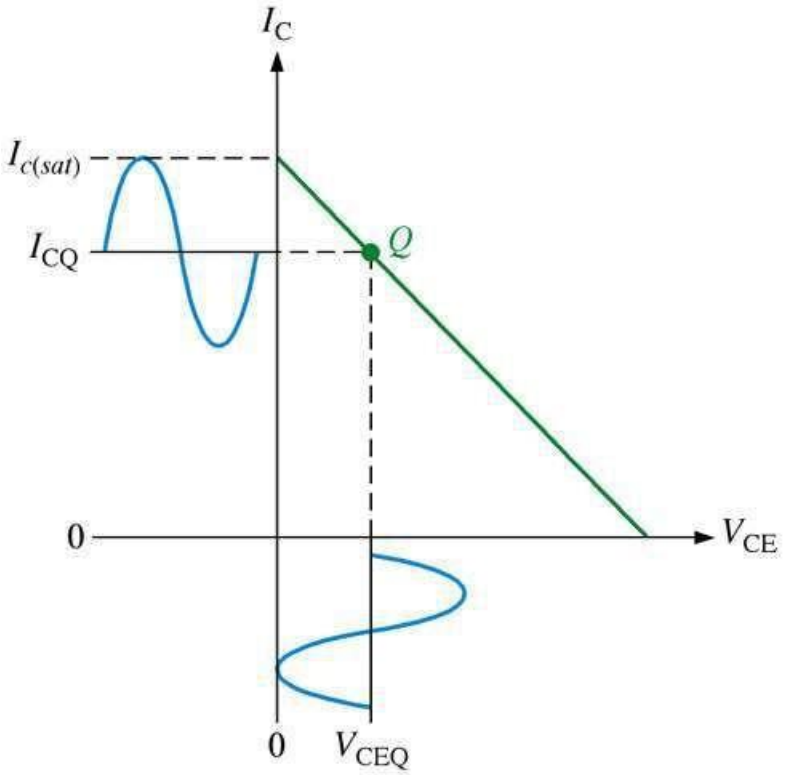

(a) Amplitude of V_{ce} and I_c limited by saturation

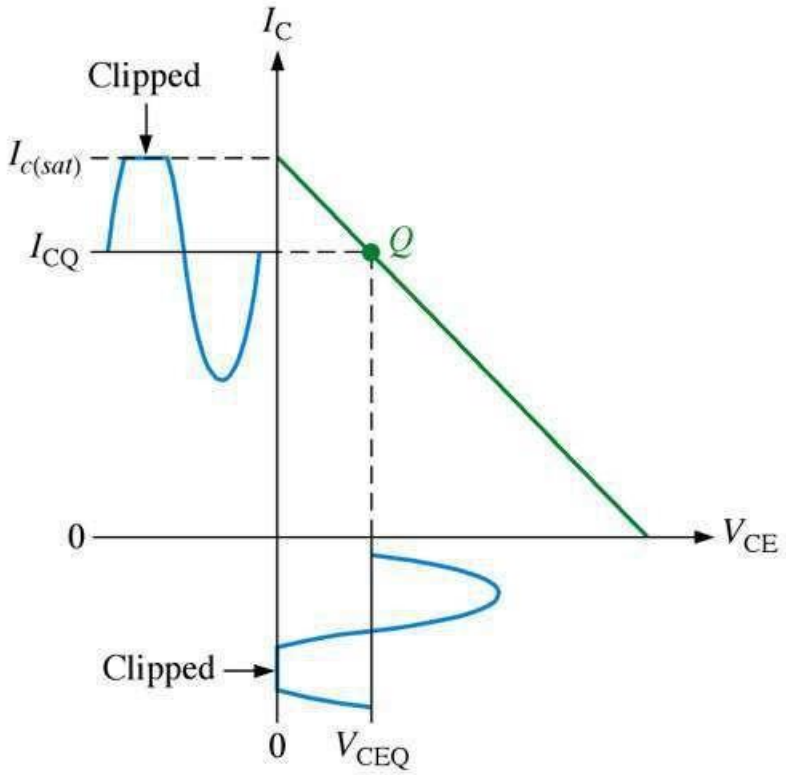

(b) Transistor driven into saturation by a further increase in input amplitude

FIGURE

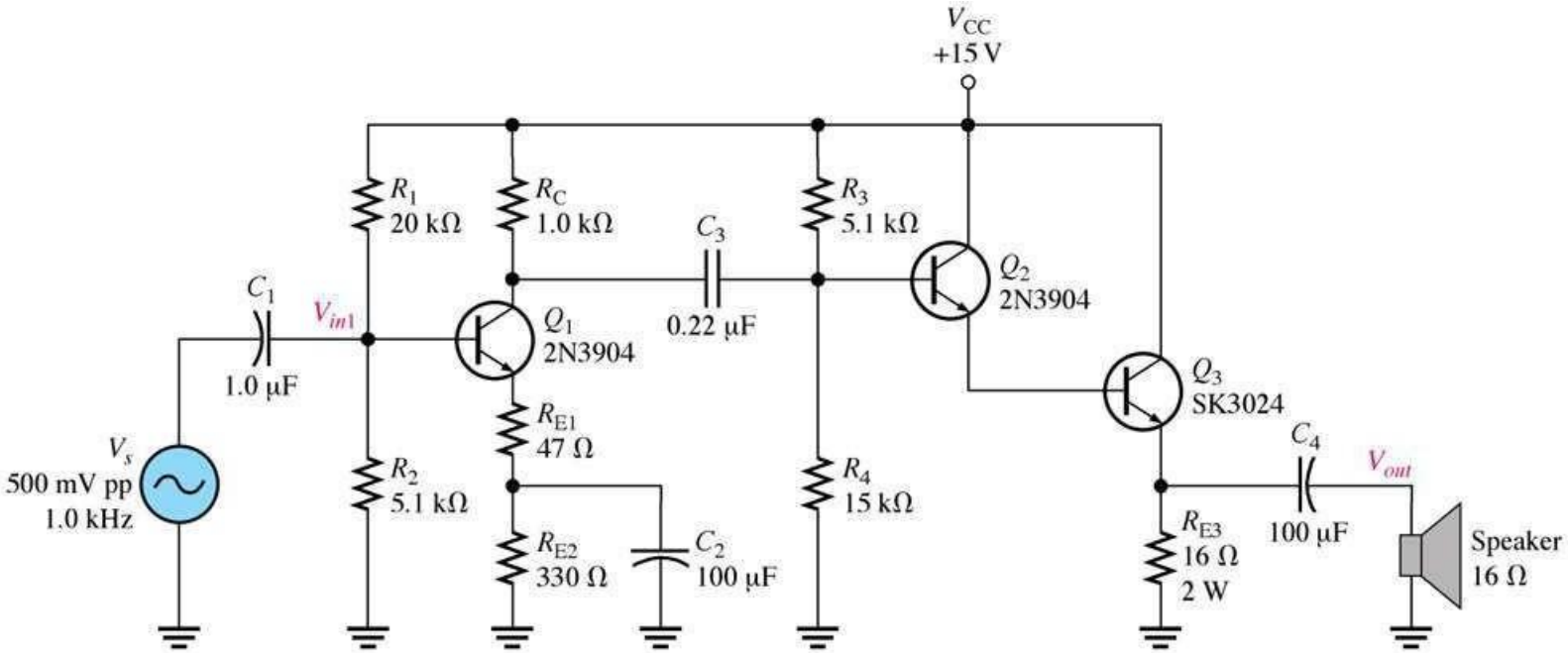
V_{CC}
+15 V
R_1
20 kΩ
R_C
1.0 kΩ
C_3
R_3
5.1 kΩ
Q_2
2N3904
C_1
V_{in1}
Q_1
2N3904
0.22 µF
1.0 µF
Q_3
SK3024
R_{E1}
47 Ω
C_4
V_{out}
V_s
500 mV pp
1.0 kHz
R_2
5.1 kΩ
R_4
15 kΩ
R_{E3}
16 Ω
2 W
100 µF
R_{E2}
330 Ω
C_2
100 µF
Speaker
16 Ω

FIGURE 9-30 Class A power amplifier with correct output voltage swing.

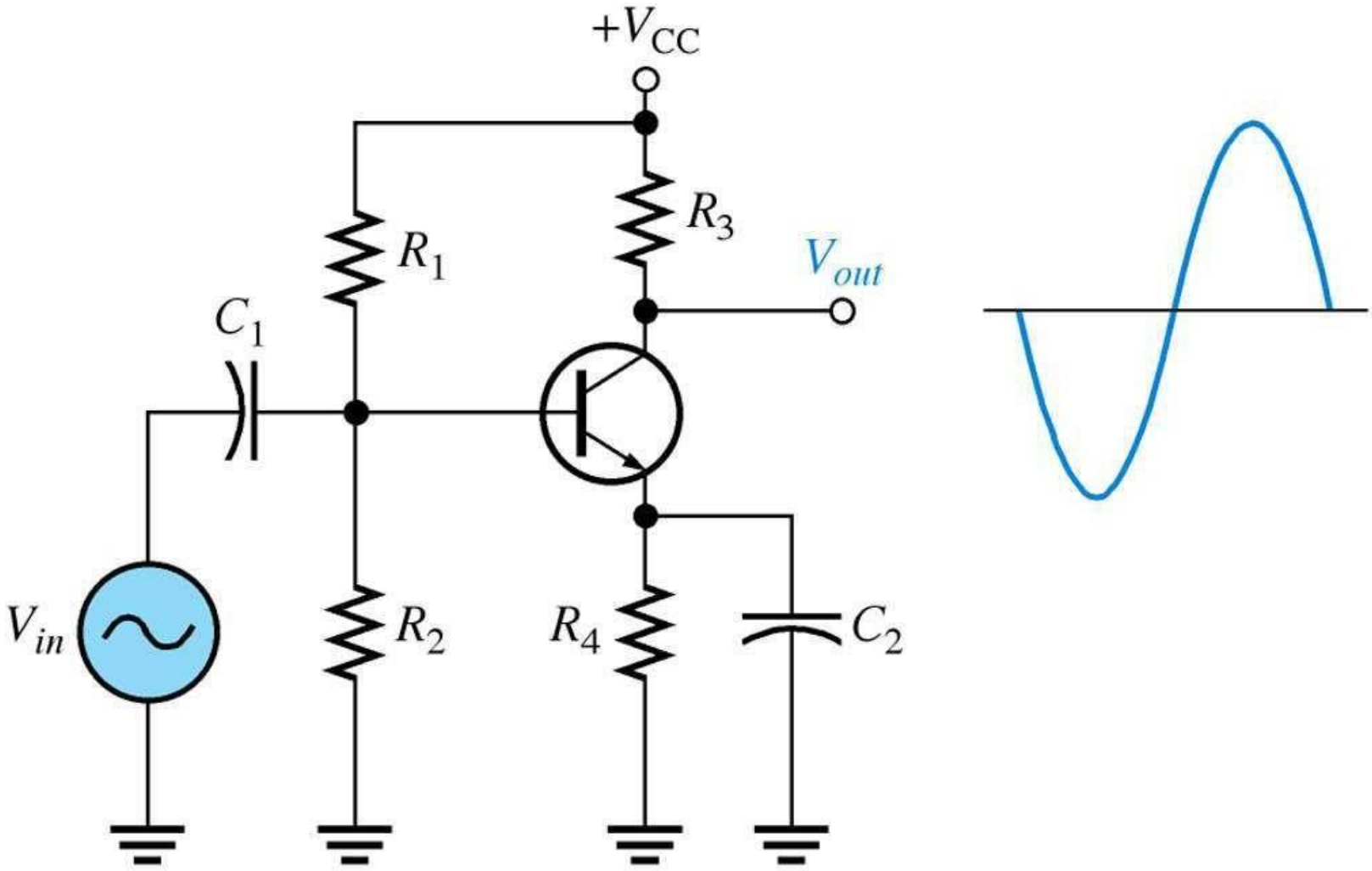

Why is class A so inefficient ?

- Single transistor can only conduct in one direction.
- D.C. bias current is needed to cope with negative going signals.
- 75 % (or more) of the supplied power is dissipated by d.c.
- Solution : eliminate the bias current.

Class A

- Class A amplifiers have very low distortion (lowest distortion occurs when the volume is low)

- They are very inefficient and are rarely used for high power designs.

- The distortion is low because the transistors in the amp are biased such that they are half "on" when the amp is idling

Class A

- As a result of being half on at idle, a lot of power is dissipated in the devices even when the amp has no music playing!
- Class A amps are often used for "signal" level circuits (where power requirements are small) because they maintain low distortion.

Class-A Benefits

- The first is circuit simplicity.
- The signal is subjected to comparatively little amplification, resulting in an open loop gain which is generally fairly low.
- This means that very little overall feedback is used, so stability and phase should be excellent over the audio frequencies.
- Do not require any frequency compensation.

Class-A Benefits

- No cross over distortion
- No switching distortion
- Lower harmonic distortion in the voltage amplifier
- Lower harmonic distortion in the current amplifier
- No signal dependent distortion from the power supply
- Constant and low output impedance
- Simpler design

Power Amplifier Classes – "B"

- Class "B"
  - opposite of class A: both output devices are never allowed to be on at the same time
  - each output device is on for exactly one half of a complete sinusoidal signal cycle
  - class B designs show high efficiency but poor linearity around the crossover region (due to the time it takes to turn one device off and the other device on, which translates into extreme crossover distortion)
  - class B designs restricted to low power applications, e.g., battery operated equipment, such as communications audio

Class A vs. Class B

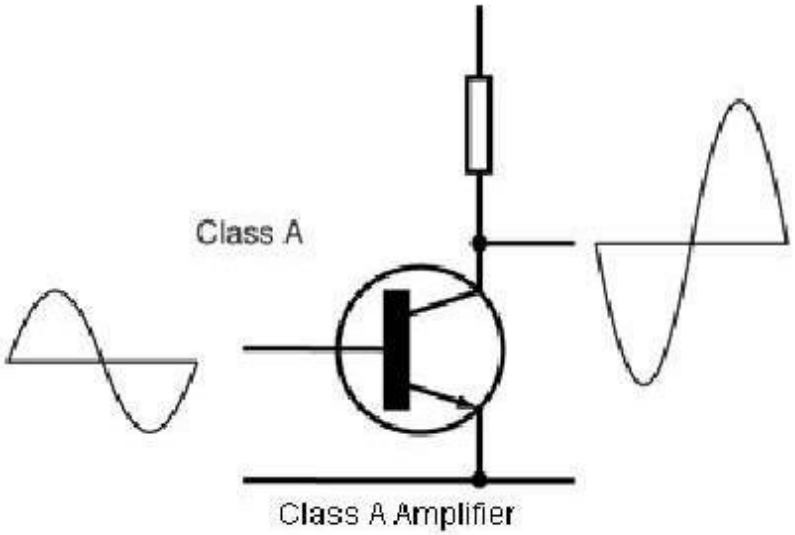

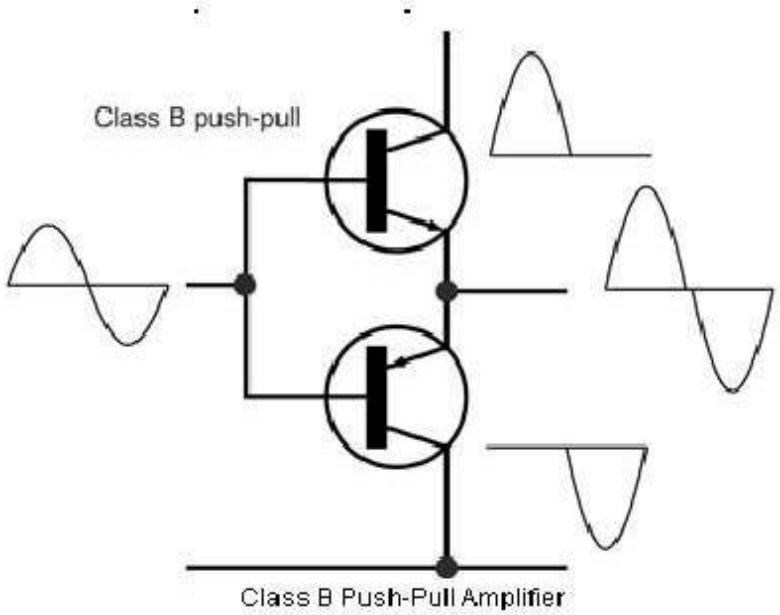

Circuit Operation

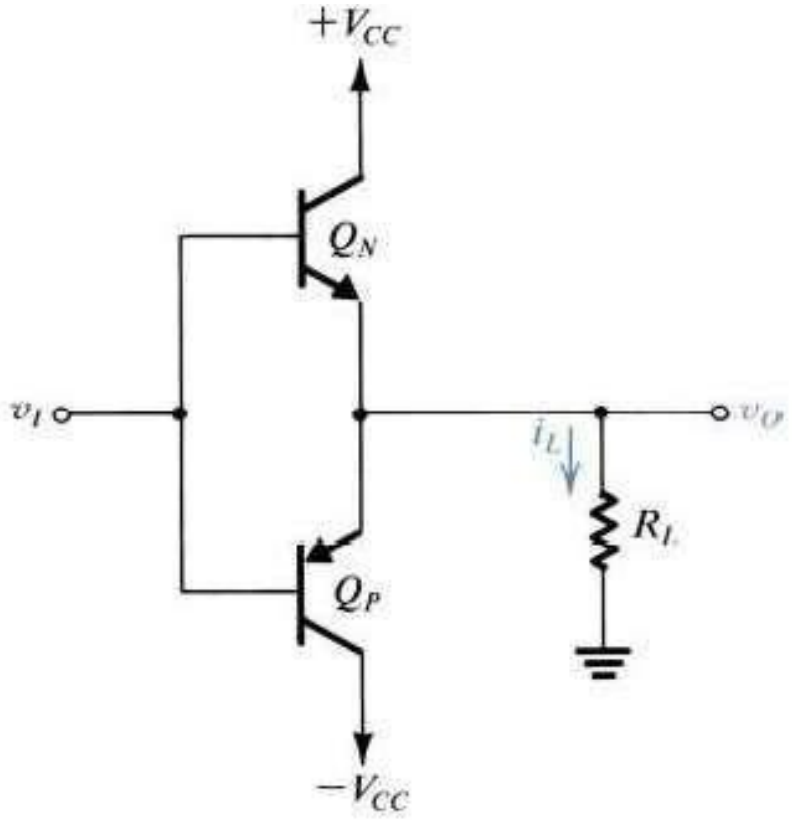

Class B output stage.

Basic class B amplifier operation (noninverting).

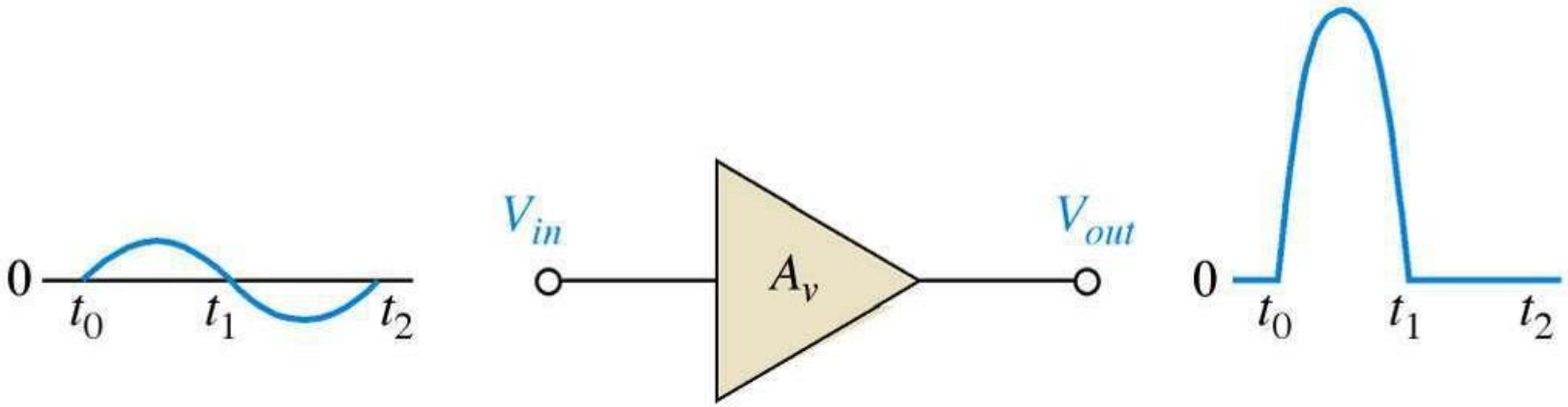

Common-collector class B amplifier.

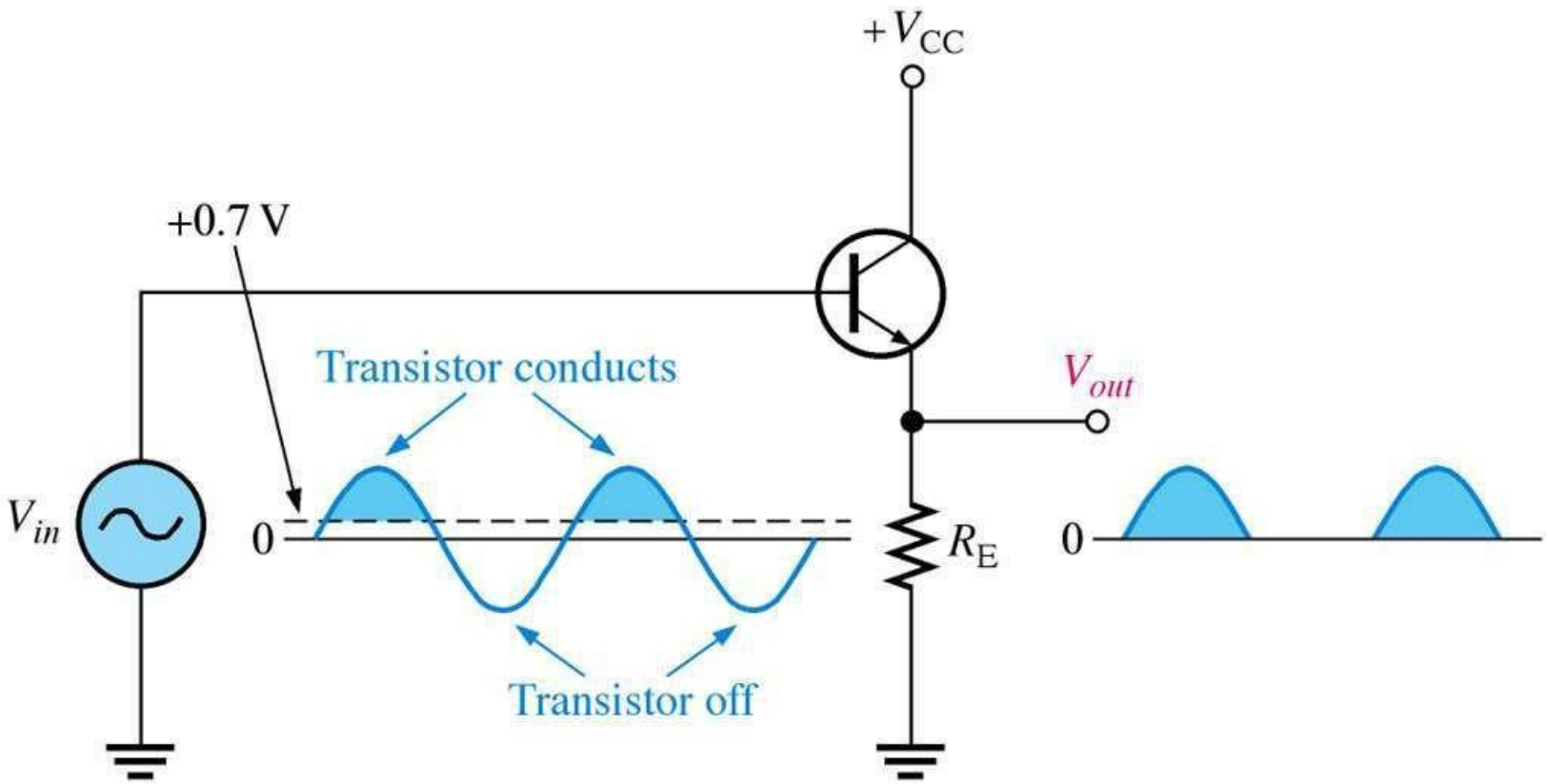

Class B push-pull ac operation.

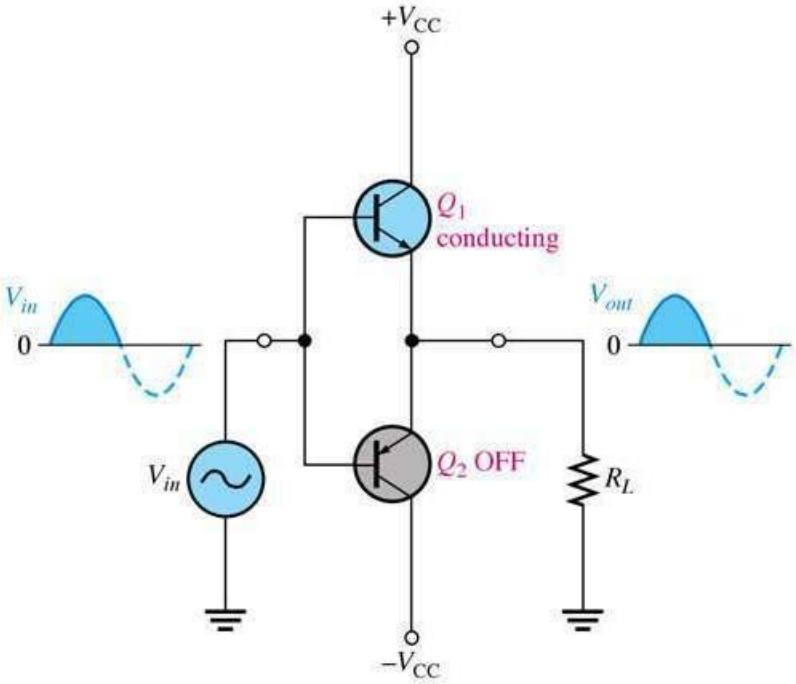

(a) During a positive half-cycle

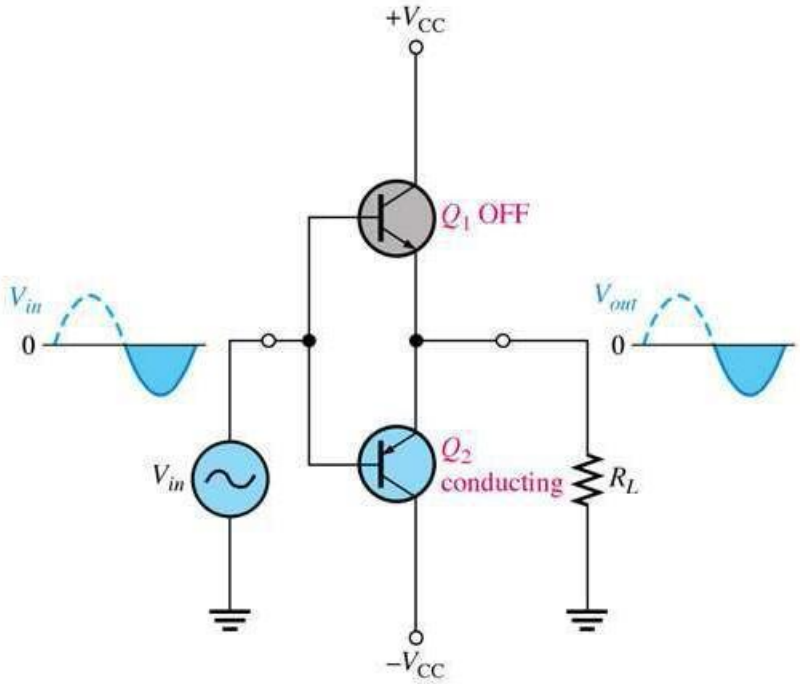

(b) During a negative half-cycle

Transfer Characteristics

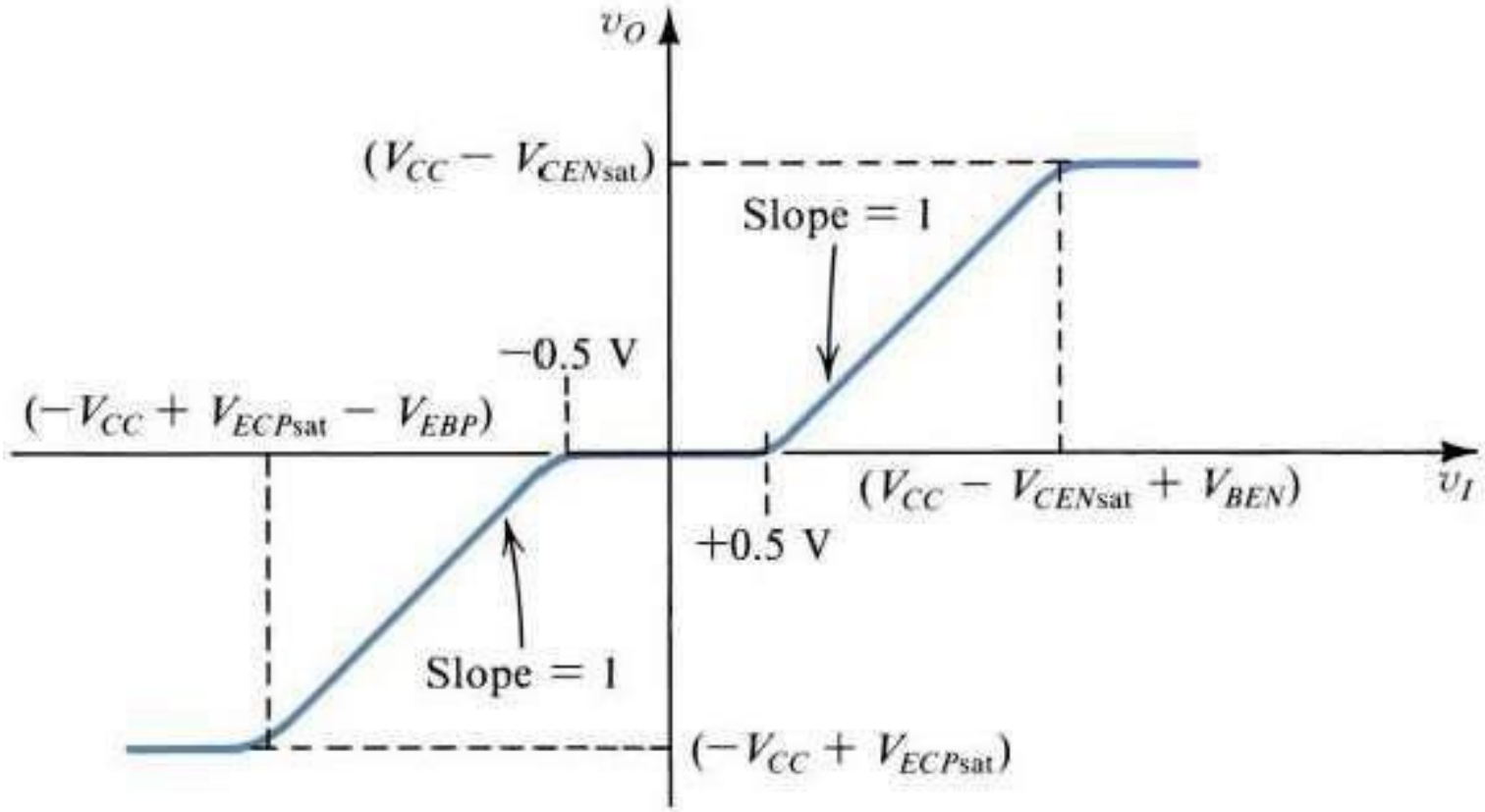

Transfer characteristic for the class B output stage.

Crossover Distortion

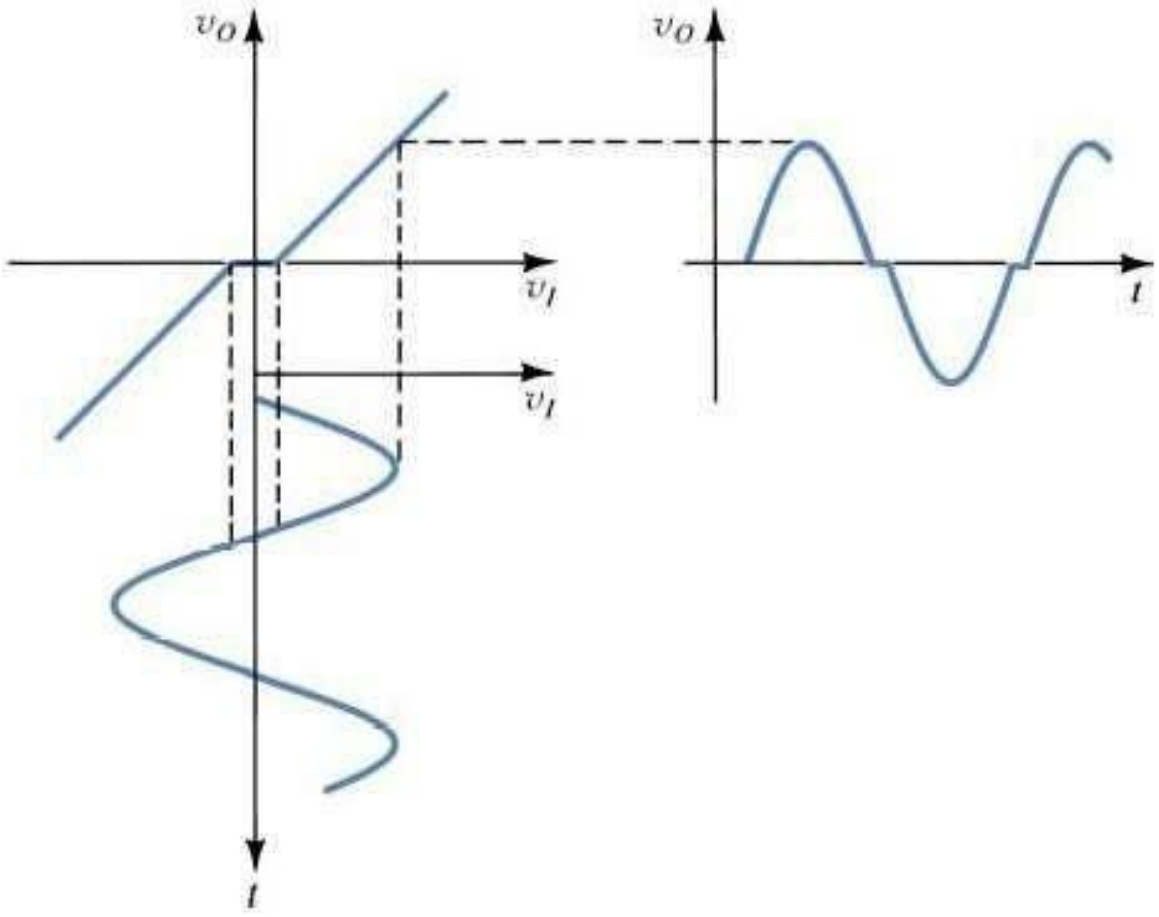

How the dead band in the class B transfer characteristic results in crossover distortion.

Illustration of crossover distortion in a class B push-pull amplifier. The transistors conduct only during the portions of the input indicated by the shaded areas.

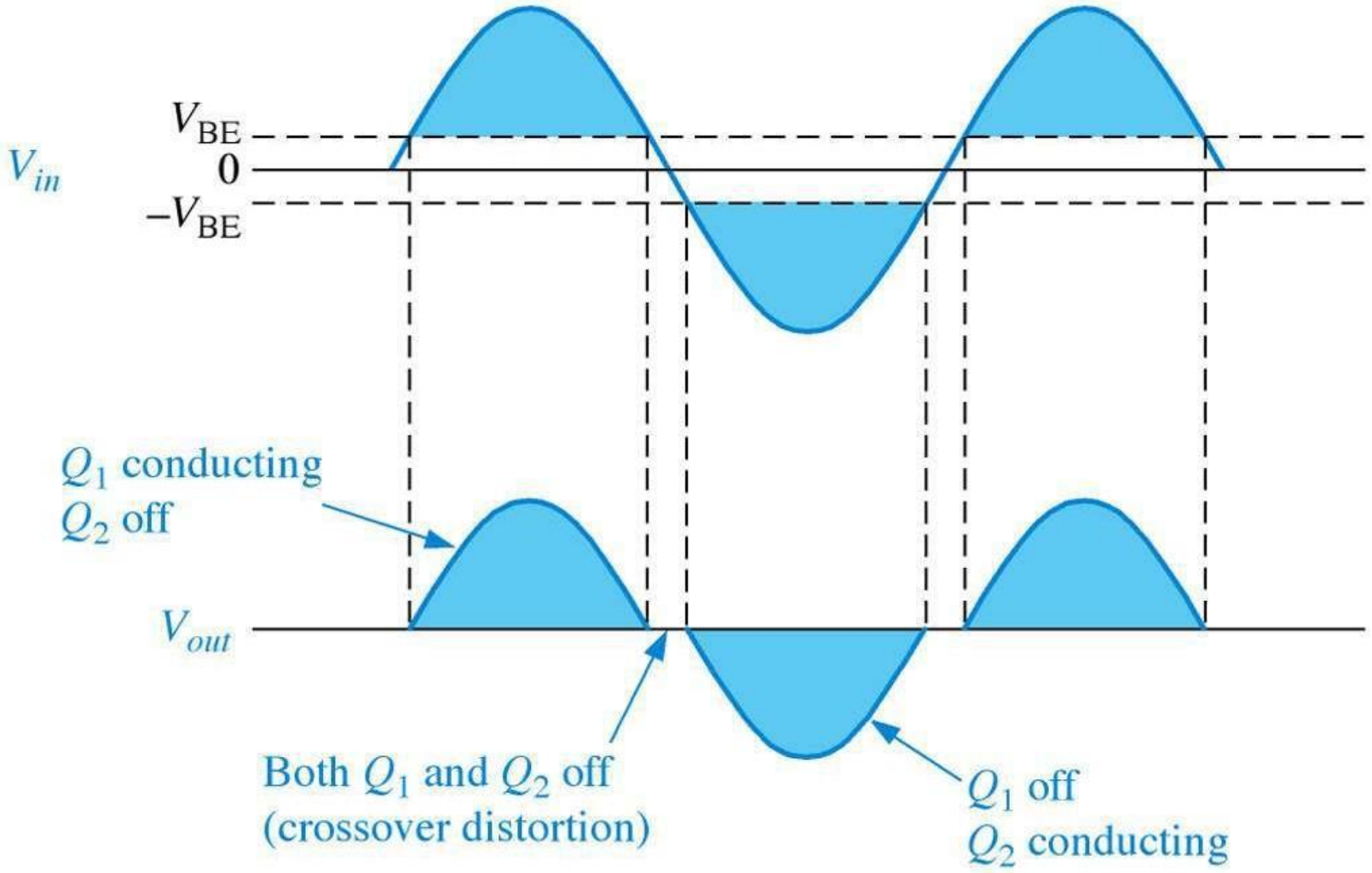

Transformer coupled push-pull amplifiers. Q_1 conducts during the positive half-cycle; Q_2 conducts during the negative half-cycle. The two halves are combined by the output transformer.

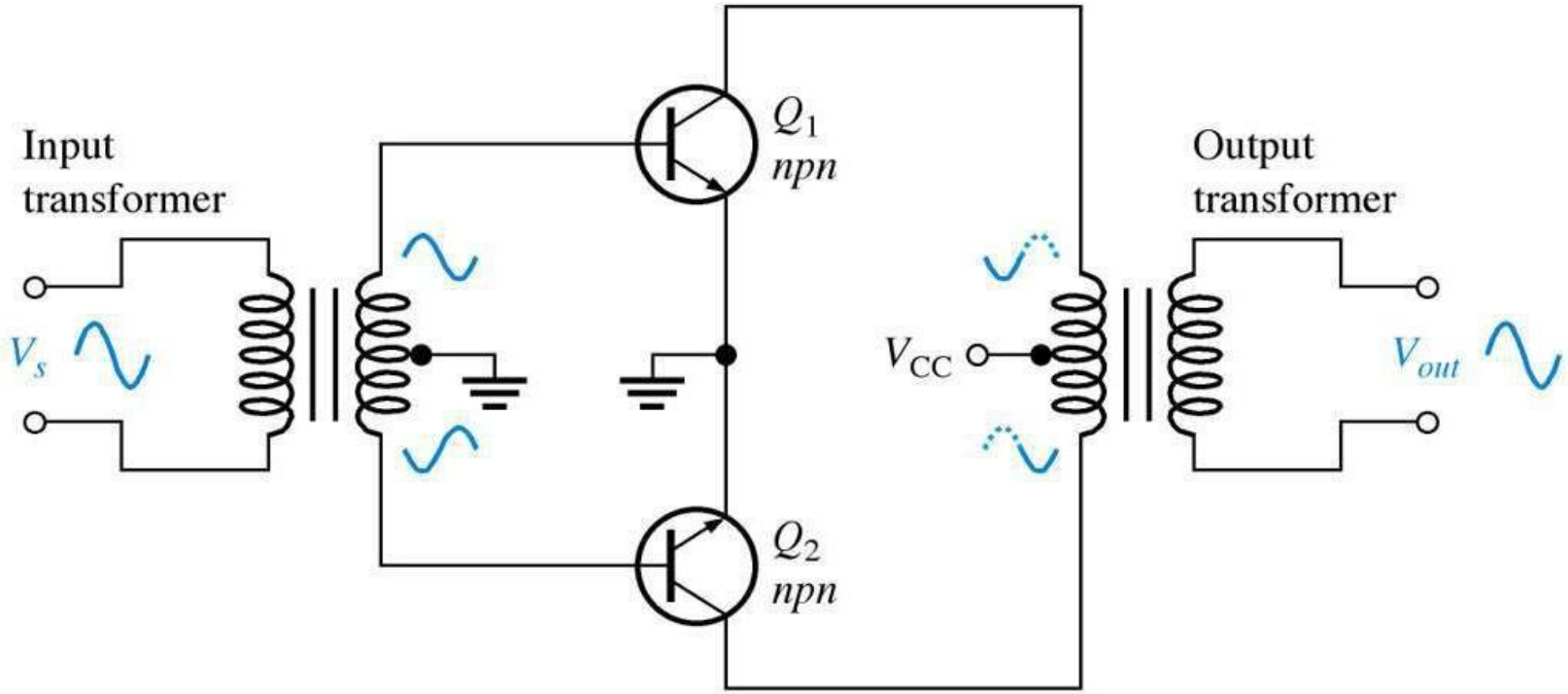

Biasing the push-pull amplifier to eliminate crossover distortion.

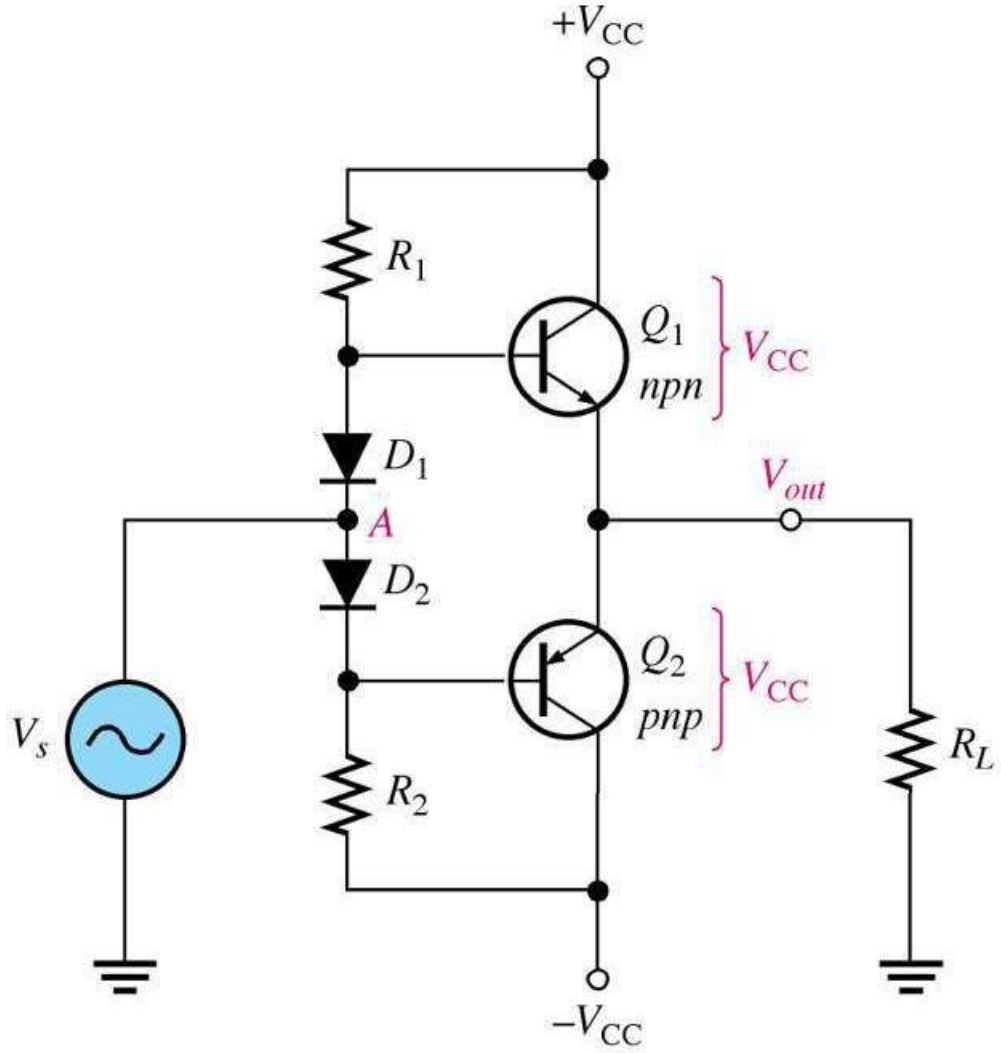

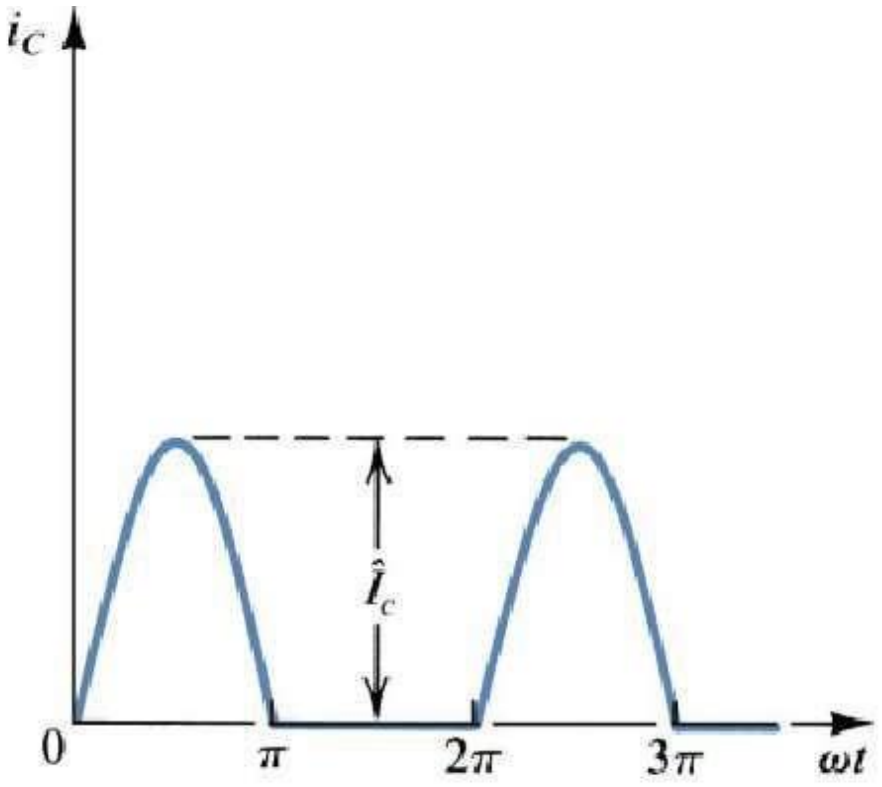

Collector current waveforms for transistors operating in class B amplifier stages

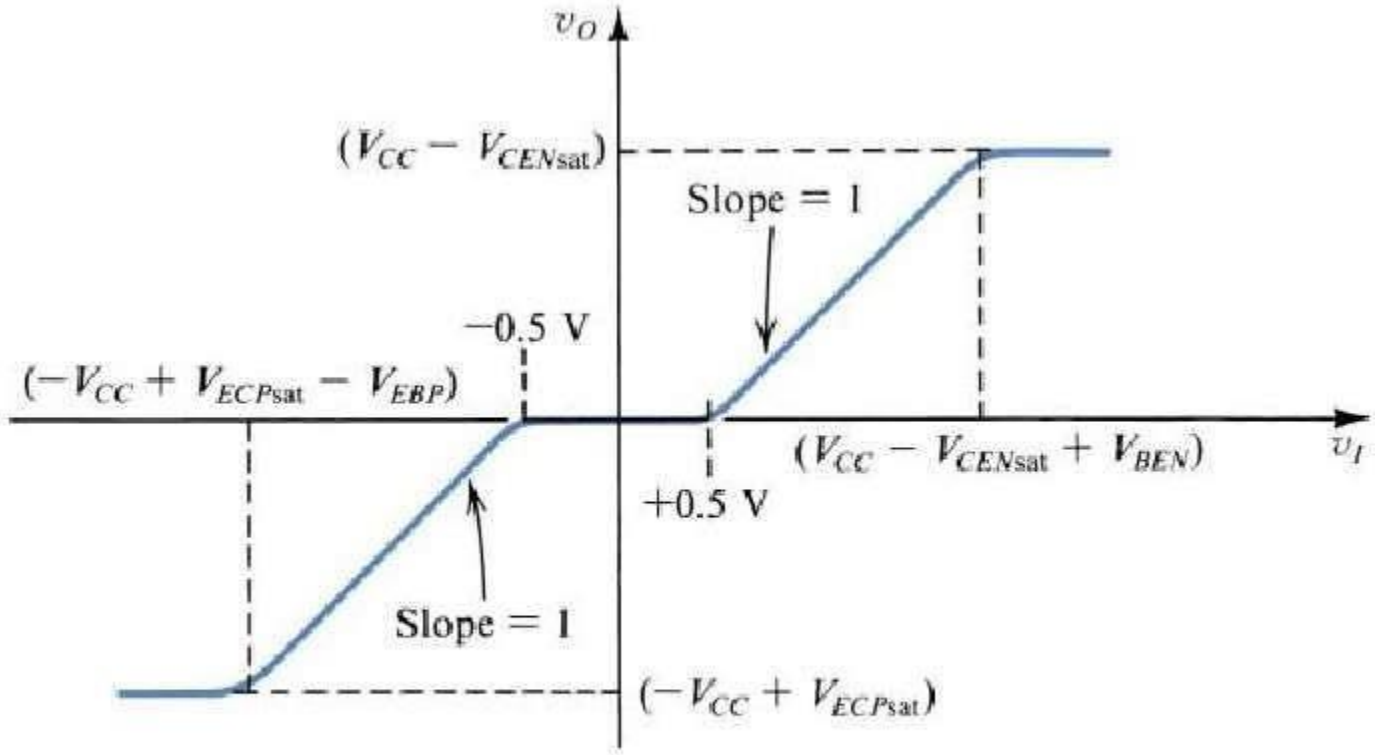

Transfer characteristic for the class B output stage.

Class B Output Stage

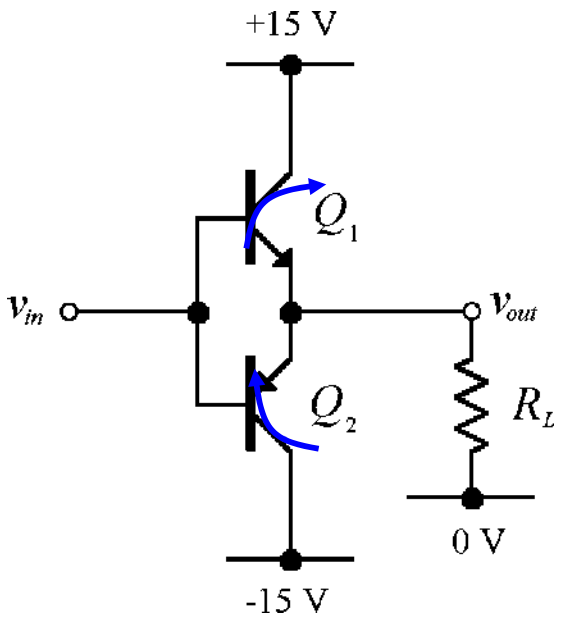

- Q_1 and Q_2 form two unbiased emitter followers
  - Q_1 only conducts when the input is positive
  - Q_2 only conducts when the input is negative
- Conduction angle is, therefore, 180°
- When the input is zero, neither conducts
- i.e. the quiescent power dissipation is zero

Class B Current Waveforms

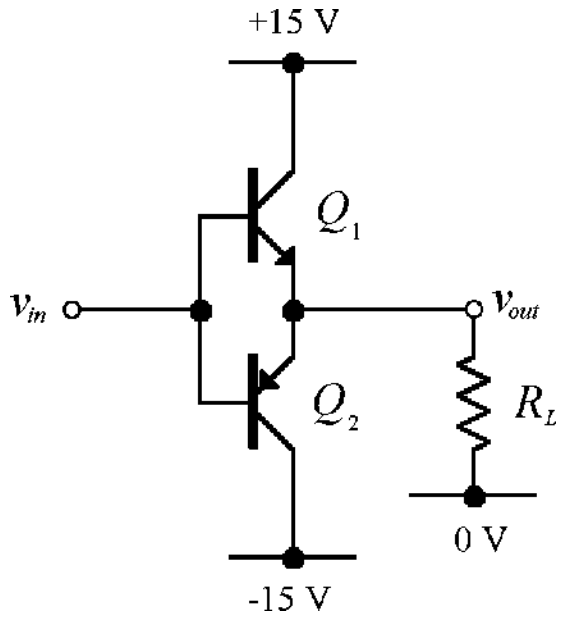

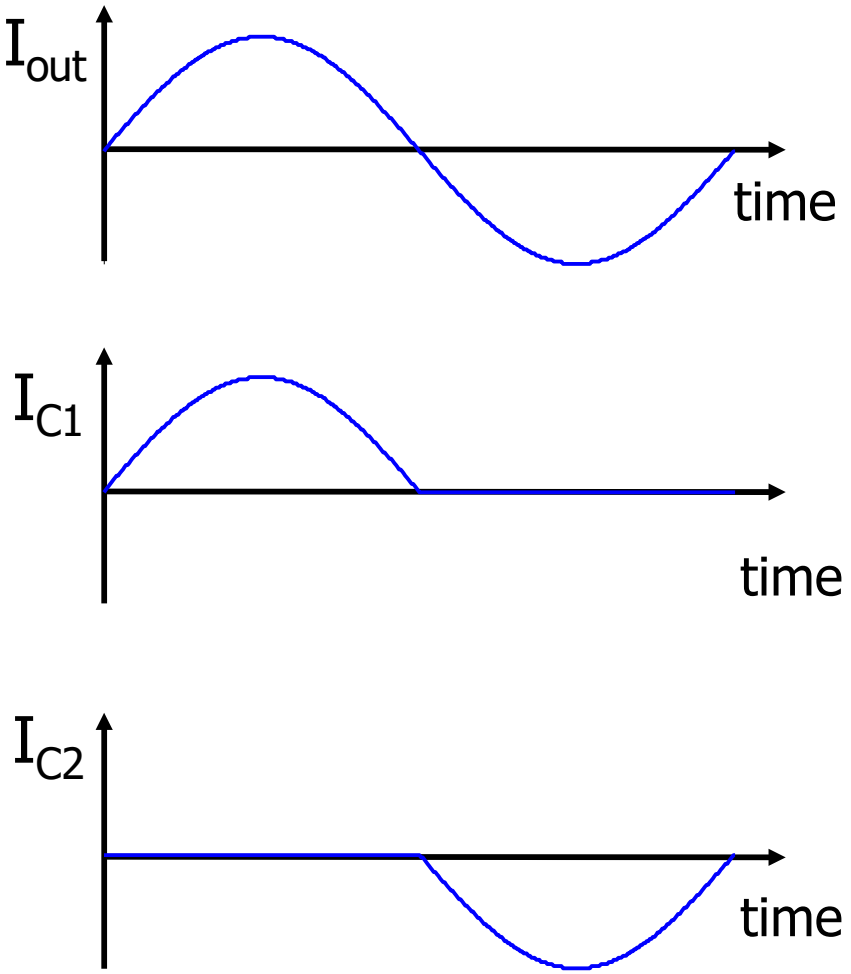

Class B Efficiency

Average power drawn from the [redacted] positive supply:

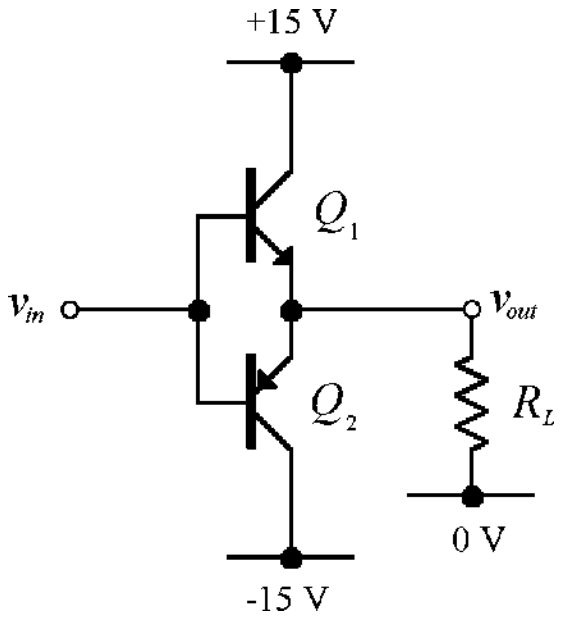

$A \sin(\theta)$

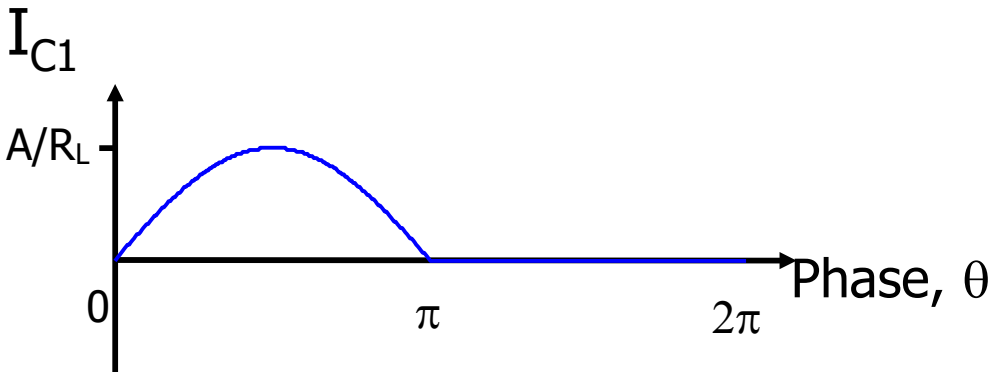

By symmetry, power drawn from +ve and –ve supplies will be the same. Total power, therefore:

[redacted]

Load power:

[redacted] $= P_{(+ve)} + P_{(-ve)} = 2P_{(+ve)} = \frac{2V_S A}{\pi R_L}$

Efficiency:

[redacted]

[redacted]

Power Dissipation

To select appropriate output transistors, the maximum power dissipation must be calculated.

Just need to find the maximum value of P_D to select transistors/heatsinks

Efficiency / Power Dissipation

- Peak efficiency of the class B output stage is 78.5 %, much higher than class A.
- Unlike class A, power dissipation varies with output amplitude.
- Remember, there are two output devices so the power dissipation is shared between them.

Cross-Over Distortion

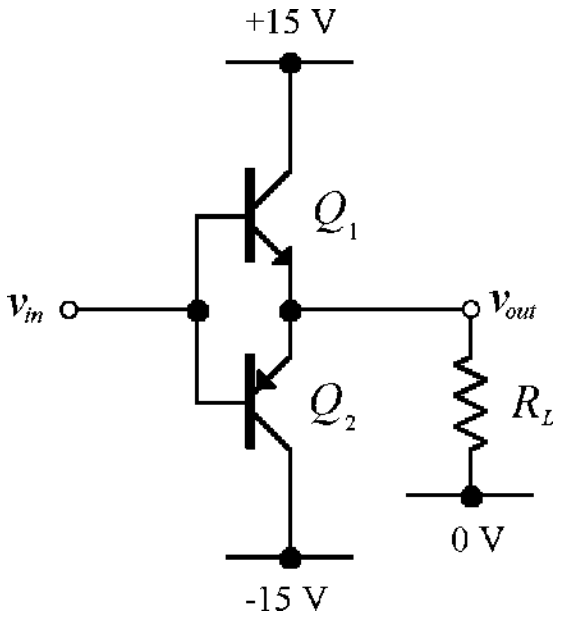

- A small base-emitter voltage is needed to turn on a transistor
- Q_1 actually only conducts when $v_{in} > 0.7$ V
- Q_2 actually only conducts when $v_{in} < -0.7$ V
- When $0.7 > v_{in} > -0.7$, nothing conducts and the output is zero.
- i.e. the input-output relationship is not at all linear.

Effect of Cross-Over Distortion

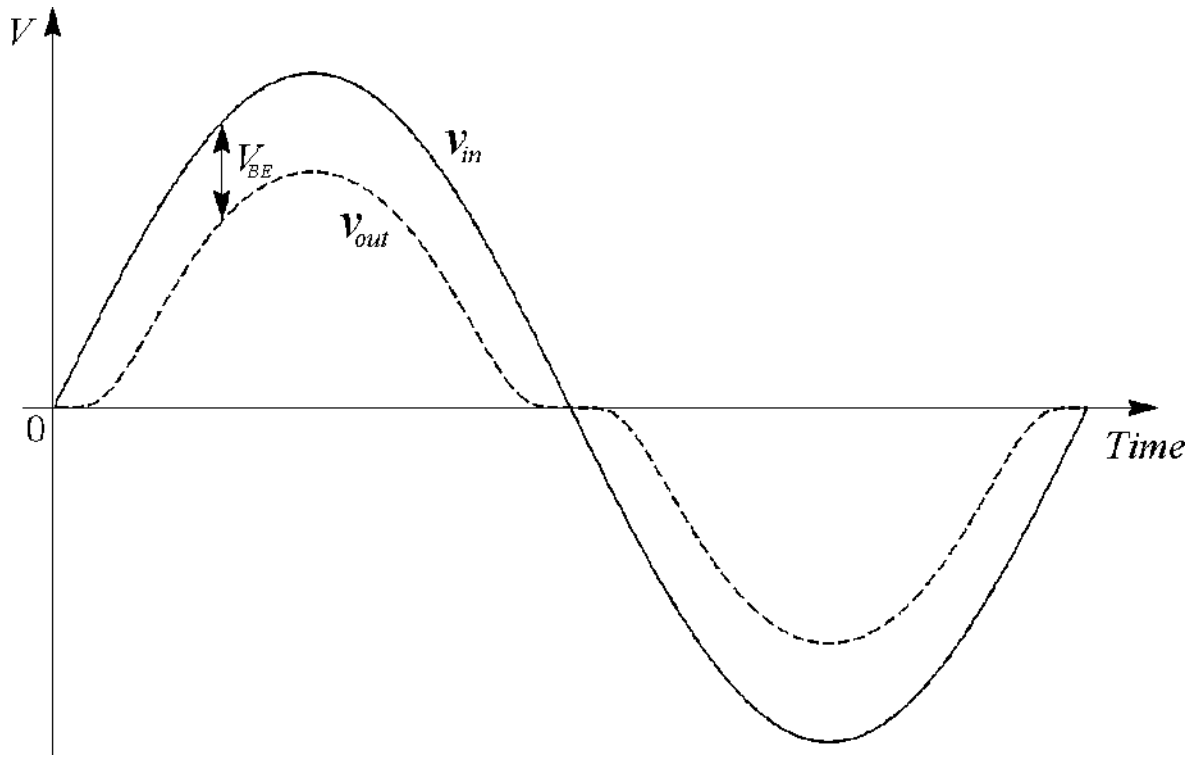

Class B

- A class B output stage can be far more efficient than a class A stage (78.5 % maximum efficiency compared with 25 %).
- It also requires twice as many output transistors…
- …and it isn’t very linear; cross-over distortion can be significant.

Class B

- Class B amplifiers are used in low cost designs or designs where sound quality is not that important.
- Class B amplifiers are significantly more efficient than class A amps.
- They suffer from bad distortion when the signal level is low (the distortion in this region of operation is called "crossover distortion").

Class B

- Class B is used most often where economy of design is needed.

- Before the advent of IC amplifiers, class B amplifiers were common in clock radio circuits, pocket transistor radios, or other applications where quality of sound is not that critical.

Power Amplifier Classes – "AB"

- Class "AB"
  - intermediate case: both devices are allowed to be on at the same time, *but just barely*
  - output bias is set so that current flows in a specific output device appreciably more than a half cycle but less than the entire cycle (enough to keep each device operating *so they respond instantly* to input voltage demands)
  - the inherent non-linearity of class B designs is eliminated, without the gross inefficiencies of the class A design
  - combination of good efficiency (around 50%) with excellent linearity that makes class AB the most popular consumer audio amplifier design

Class AB

- Class AB is probably the most common amplifier class currently used in home stereo and similar amplifiers.

- Class AB amps combine the good points of class A and B amps.

- They have the improved efficiency of class B amps and distortion performance that is a lot closer to that of a class A amp.

Eliminating crossover distortion in a transformer-coupled push-pull amplifier. The diode compensates for the base-emitter drop of the transistors and produces class AB operation.

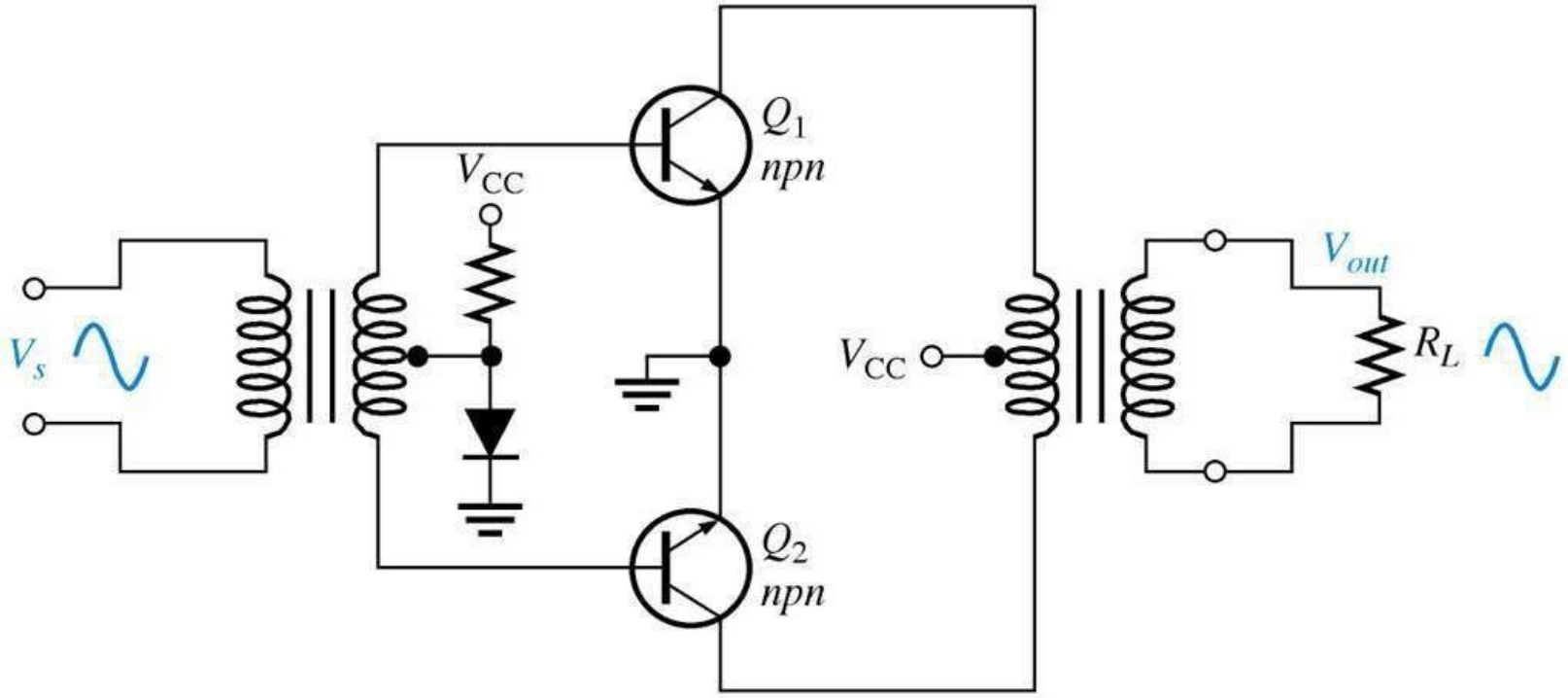

Load lines for a complementary symmetry push-pull amplifier. Only the load lines for the *npn* transistor are shown.

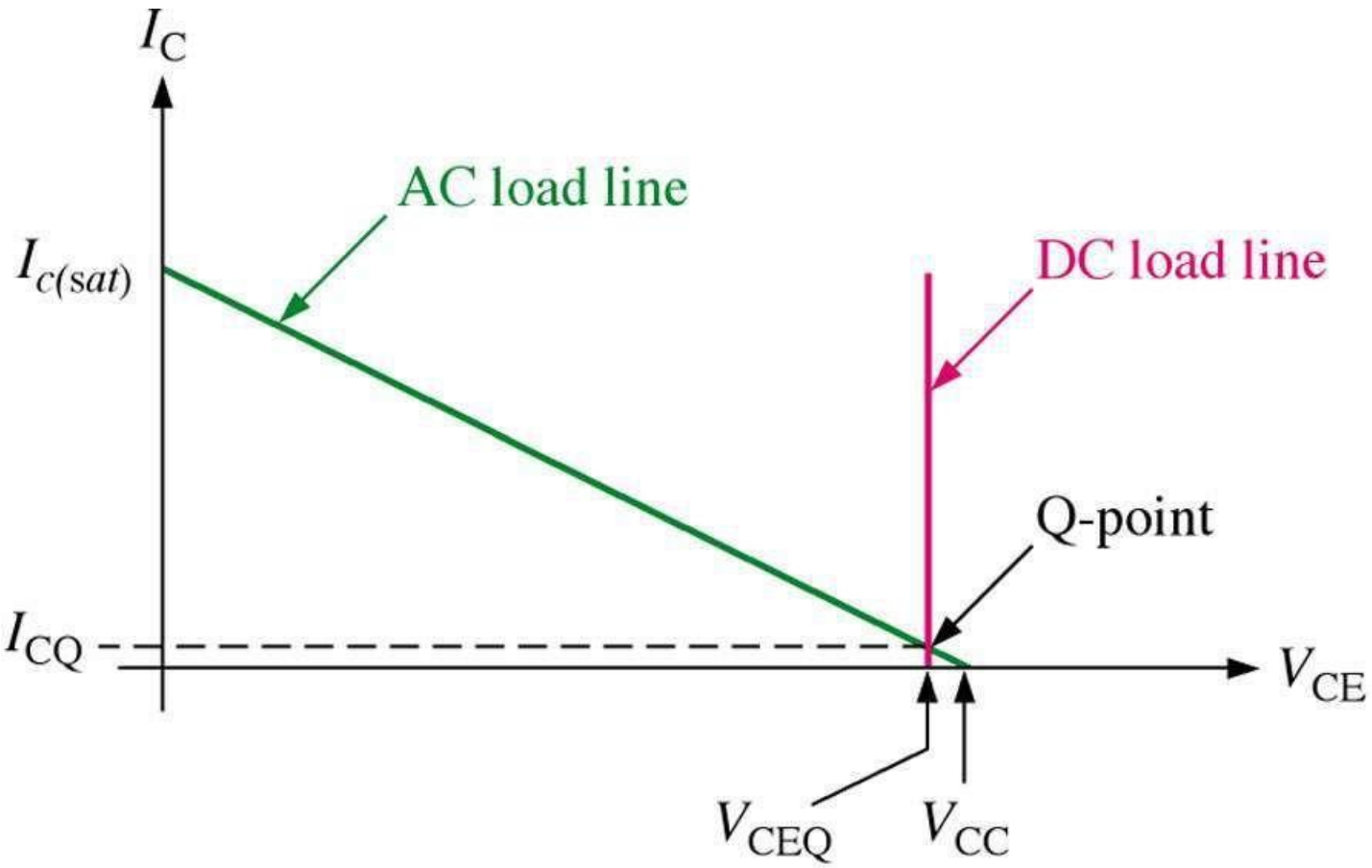

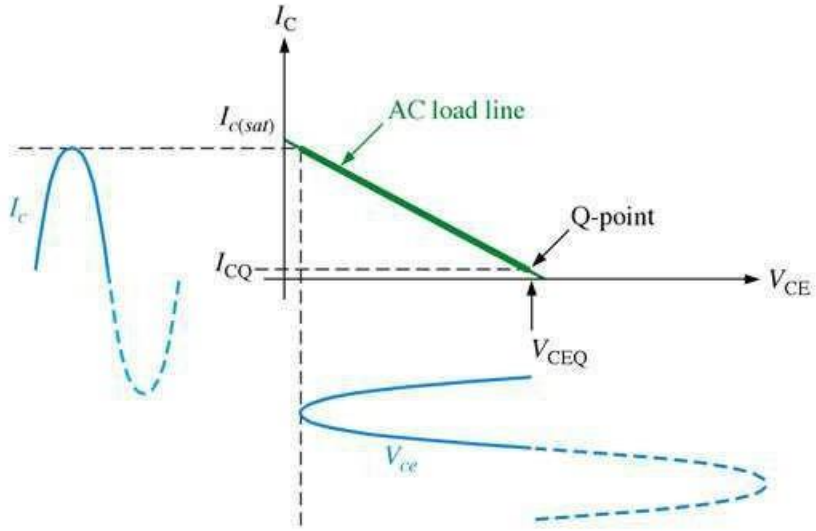

(a) AC load line for Q_1

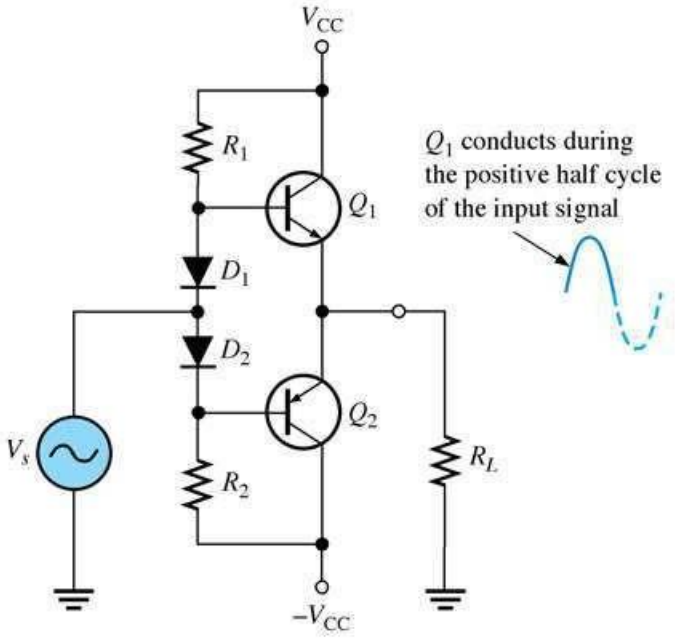

(b) Circuit

Class AB

- With such amplifiers, distortion is worst when the signal is low, and generally lowest when the signal is just reaching the point of clipping.

- Class AB amps use pairs of transistors, both of them being biased slightly ON so that the crossover distortion (associated with Class B amps) is largely eliminated.

Class C

- Class C amps are never used for audio circuits.
- They are commonly used in RF circuits.
- Class C amplifiers operate the output transistor in a state that results in tremendous distortion (it would be totally unsuitable for audio reproduction).

FIGURE 9-22 Basic class C amplifier operation (non inverting).

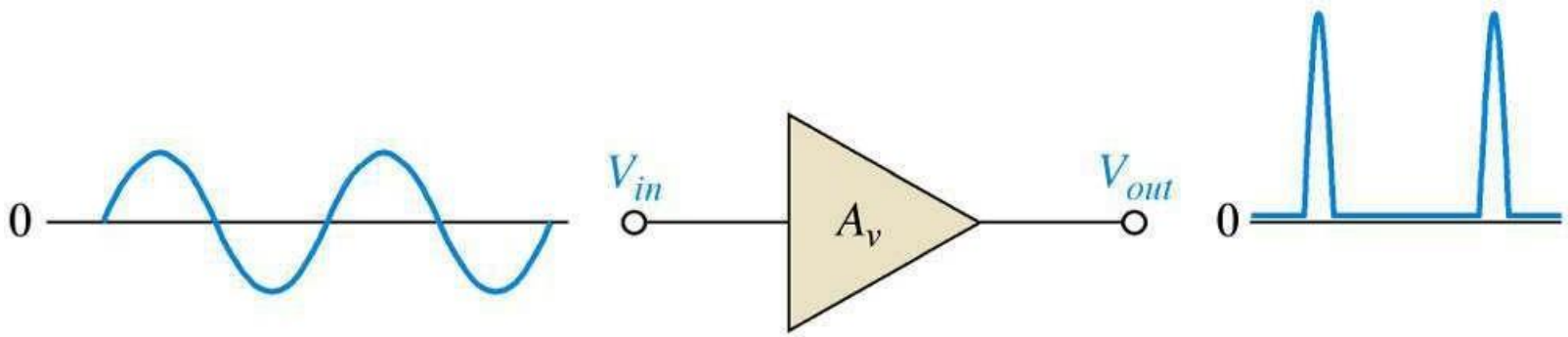

FIGURE 9-23 Basic class C operation.

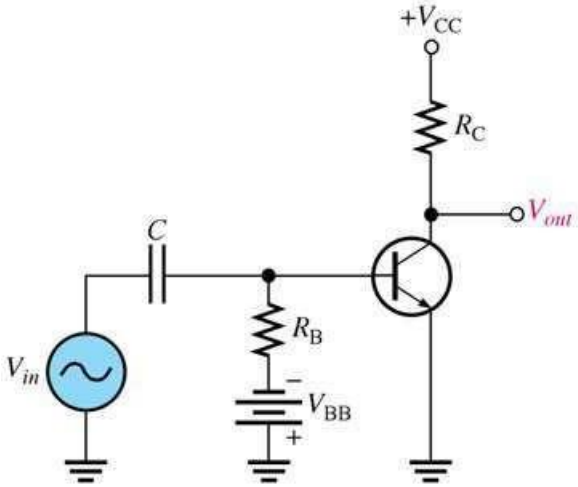

(a) Basic class C amplifier circuit

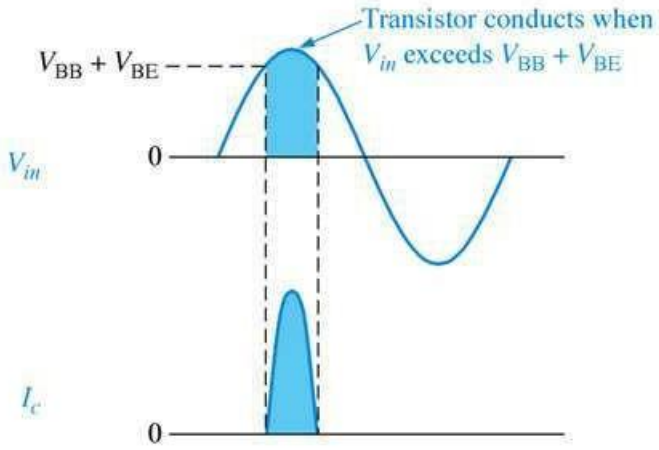

(b) Input voltage and output current waveforms

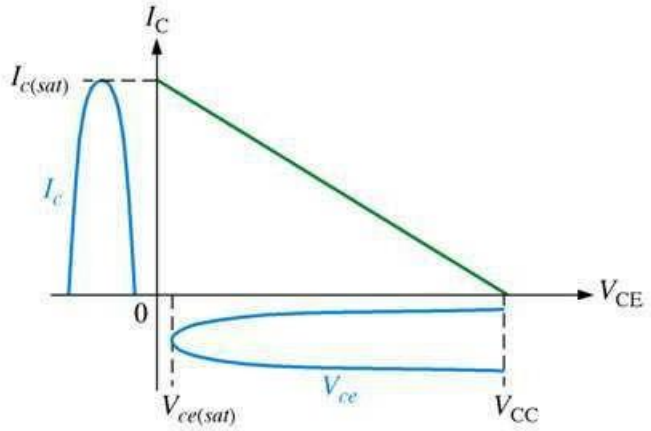

(c) Load line operation

FIGURE 9-24 Class C waveforms.

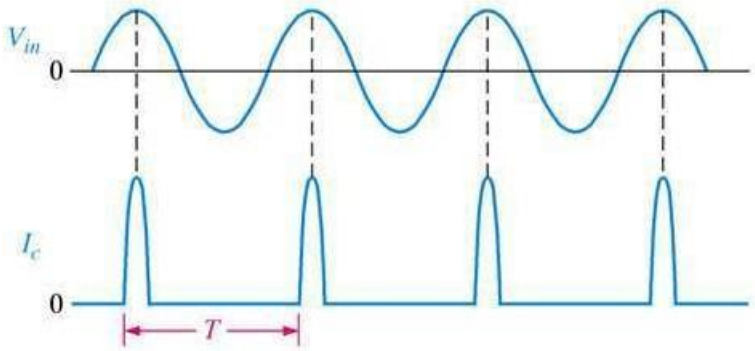

(a) Collector current pulses

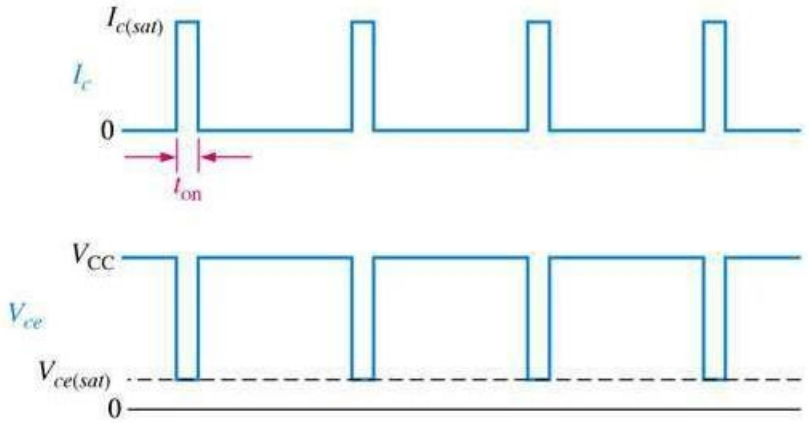

(b) Ideal class C waveforms

FIGURE 9-25 Tuned class C amplifier.

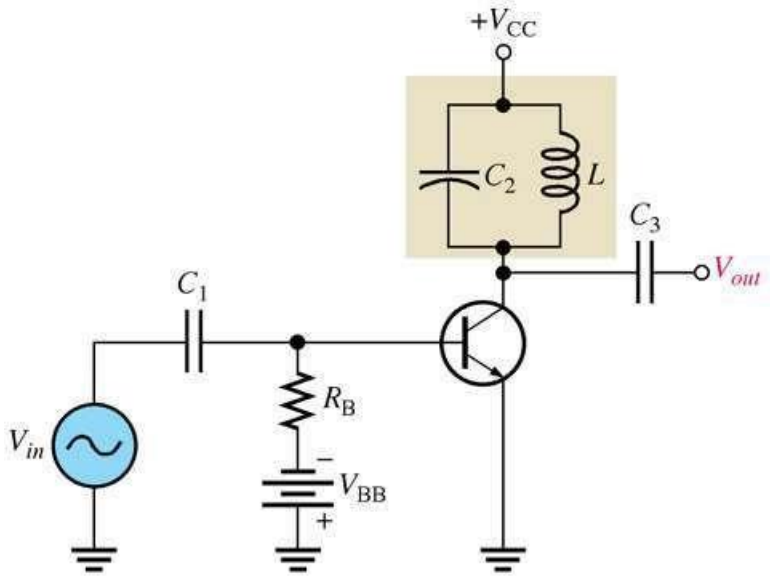

(a) Basic circuit

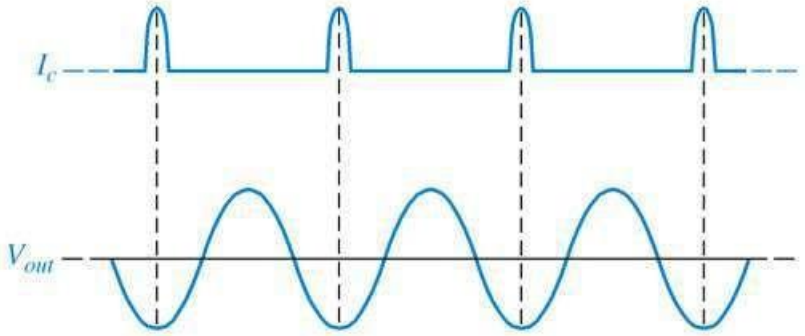

(b) Output waveforms

FIGURE 9-28 Tuned class C amplifier with clamper bias.

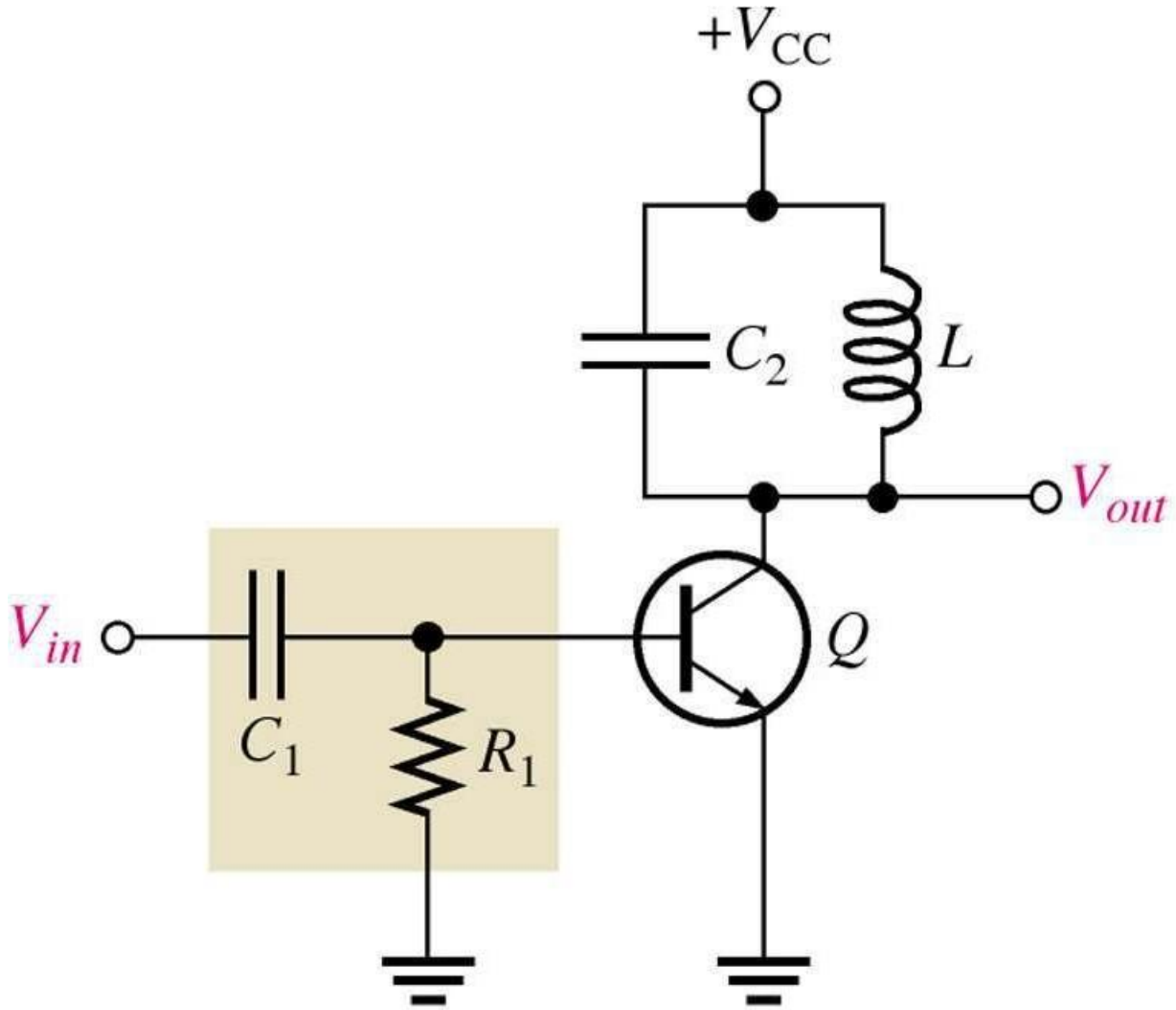

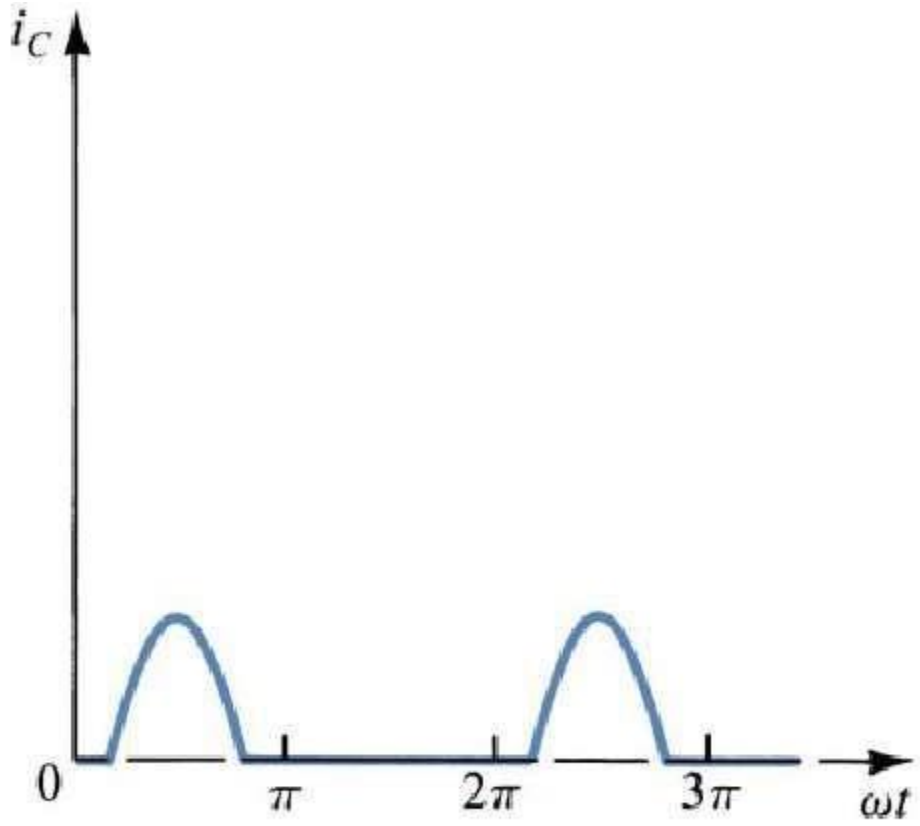

Collector current waveforms for transistors operating in class C amplifier stage

Class C

- However, the RF circuits where Class C amps are used, employ filtering so that the final signal is completely acceptable.

- Class C amps are **quite efficient**.

Chapter 3
Feedback Amplifiers

Outline

1. Introduction to Feedback
2. Feedback Amplifier – Positive & Negative
3. Advantages/Disadvantages of Negative Feedback
4. Basic Feedback Concept
5. Classification of Amplifiers
6. Series – Shunt Configuration
7. Shunt – Series Configuration
8. Series - Series Configuration
9. Shunt – Shunt Configuration

Introduction to Feedback

- Feedback is used in virtually all amplifier system.
- Invented in 1928 by Harold Black – engineer in Western Electric Company
  - methods to stabilize the gain of amplifier for use in telephone repeaters.
- In feedback system, a signal that is proportional to the output is fed back to the input and combined with the input signal to produce a desired system response.
- However, unintentional and undesired system response may be produced.

Feedback Amplifier

- *Feedback* is a technique where a proportion of the output of a system (amplifier) is fed back and recombined with input

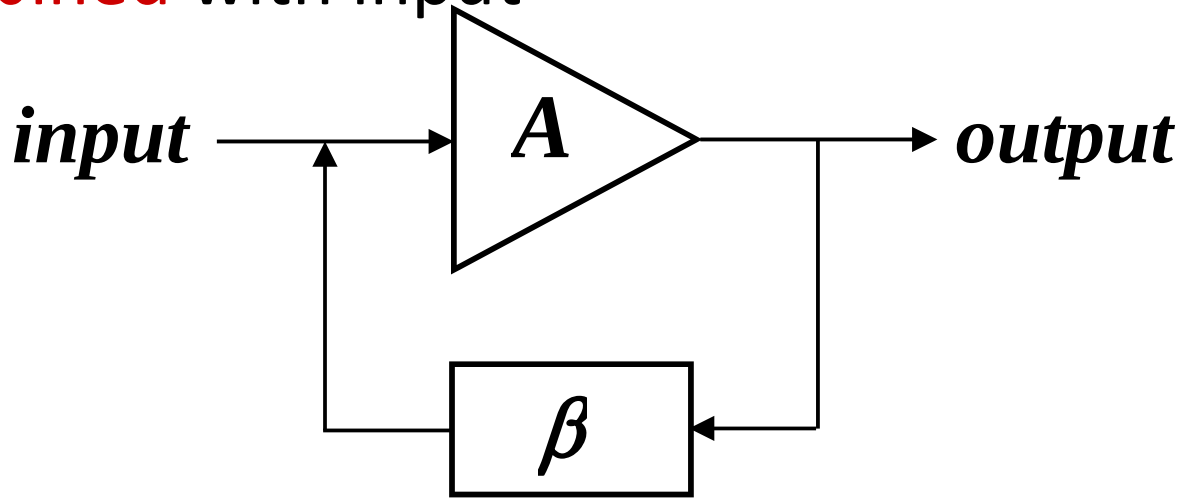

- There are 2 types of feedback amplifier:
  - Positive feedback
  - Negative feedback

Positive Feedback

- Positive feedback is the process when the output is *added* to the input, amplified again, and this process continues.

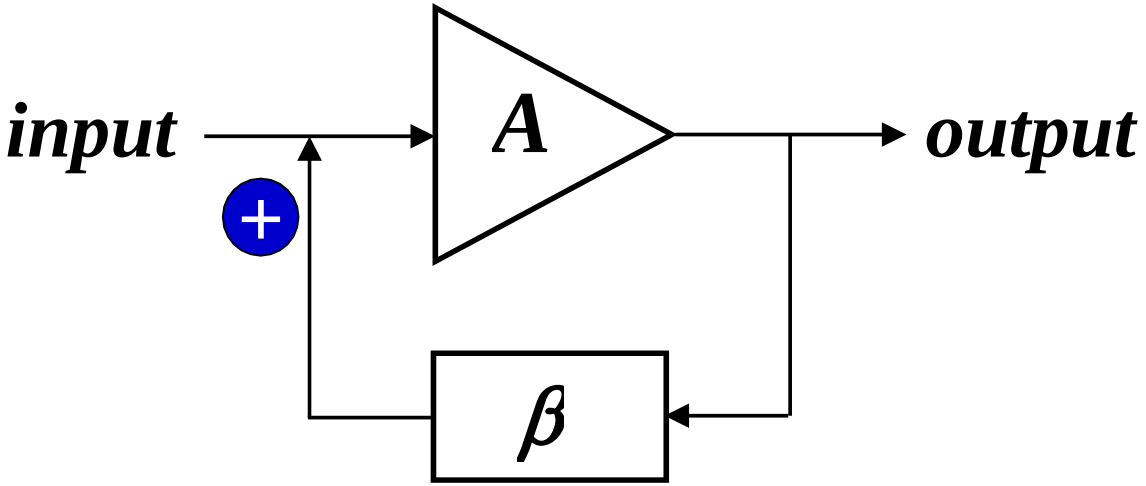

- Positive feedback is used in the design of oscillator and other application.

Positive Feedback - Example

- In a PA system

  get feedback when you put the microphone in front of a speaker and the sound gets uncontrollably loud (you have probably heard this unpleasant effect).

Negative Feedback

- Negative feedback is when the output is subtracted from the input.

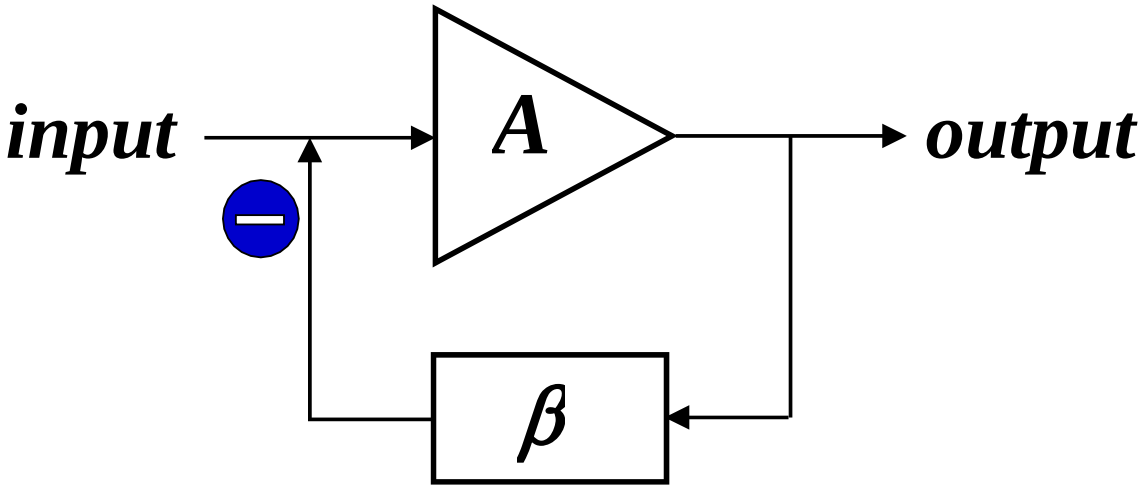

- The use of negative feedback reduces the gain. Part of the output signal is taken back to the input with a negative sign.

Negative Feedback - Example

- Speed control

  If the car starts to speed up above the desired set-point speed, negative feedback causes the throttle to close, thereby reducing speed; similarly, if the car slows, negative feedback acts to open the throttle

Feedback Amplifier - Concept

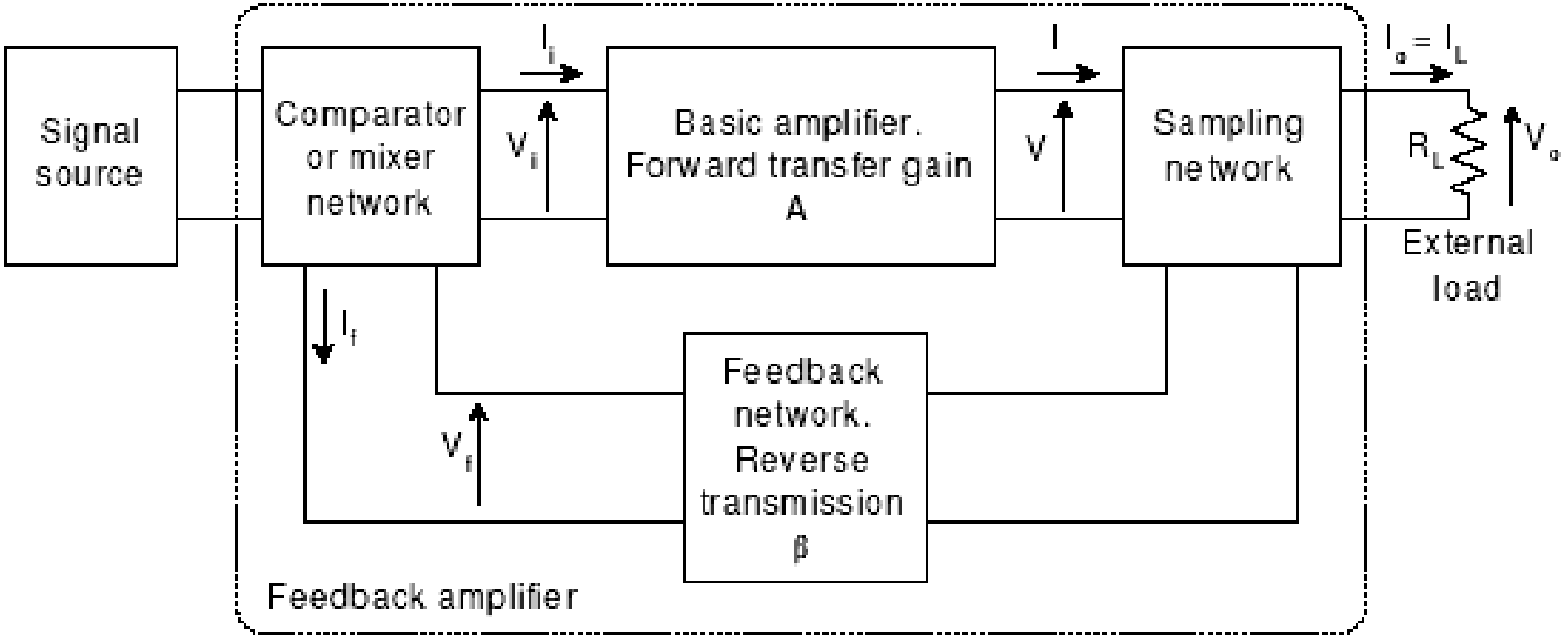

Basic structure of a single - loop feedback amplifier

Advantages of Negative Feedback

1. Gain Sensitivity – variations in gain is reduced.
2. Bandwidth Extension – larger than that of basic amplified.
3. Noise Sensitivity – may increase S-N ratio.
4. Reduction of Nonlinear Distortion
5. Control of Impedance Levels – input and output impedances can be increased or decreased.

Disadvantages of Negative Feedback

1. Circuit Gain – overall amplifier gain is reduced compared to that of basic amplifier.
2. Stability – possibility that feedback circuit will become unstable and oscillate at high frequencies.

Basic Feedback Concept

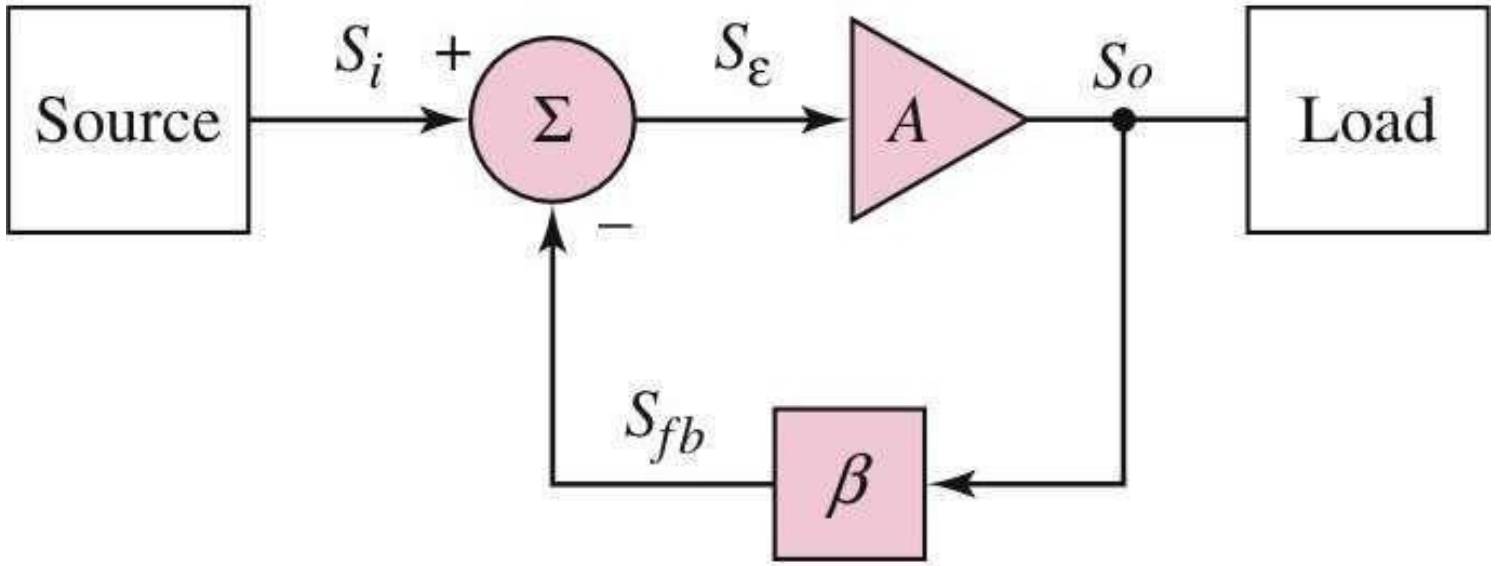

Basic configuration of a feedback amplifier

Basic Feedback Concept

- The output signal is $S_o = AS_\varepsilon$

  where A is the amplification factor
- Feedback signal is $S_{fb} = \beta S_o$

  where ß is the feedback transfer function
- At summing node: $S_\varepsilon = S_i - S_{fb}$
- Closed-loop transfer gain is $A_f = \frac{S_o}{S_i} = \frac{A}{1+\beta A}$

$\beta A >> 1$ if

Basic Feedback Concept

then

$$A_f = \frac{A}{1}$$

$$\cong \beta A$$

$$\beta$$

Classification of Amplifiers

Classify amplifiers into 4 basic categories based on their input (parameter to be amplified; voltage or current) & output signal relationships:

- Voltage amplifier (series-shunt)
- Current amplifier (shunt-series)
- Transconductance amplifier (series-series)
- Transresistance amplifier (shunt-shunt)

Feedback Configuration

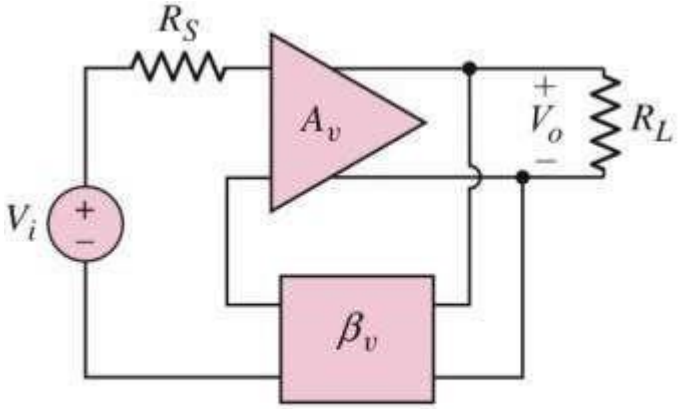

(a) Series–shunt

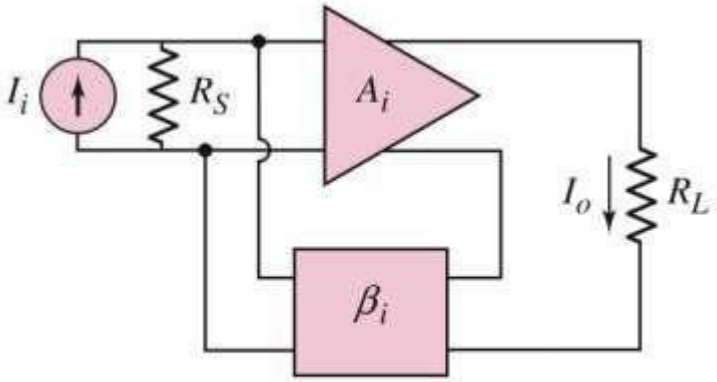

(b) Shunt–series

Series:
connecting the feedback signal in series with the input signal voltage.

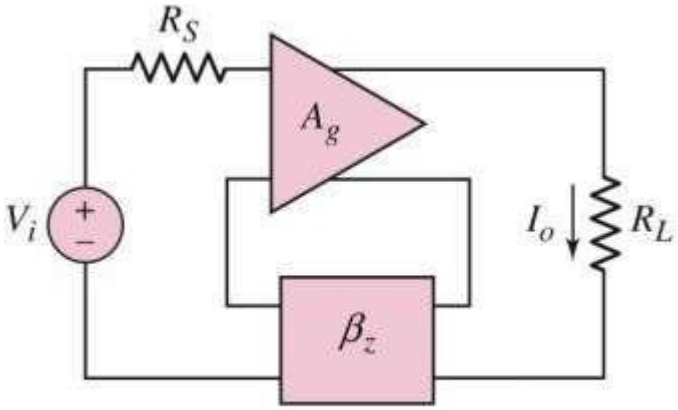

(c) Series–series

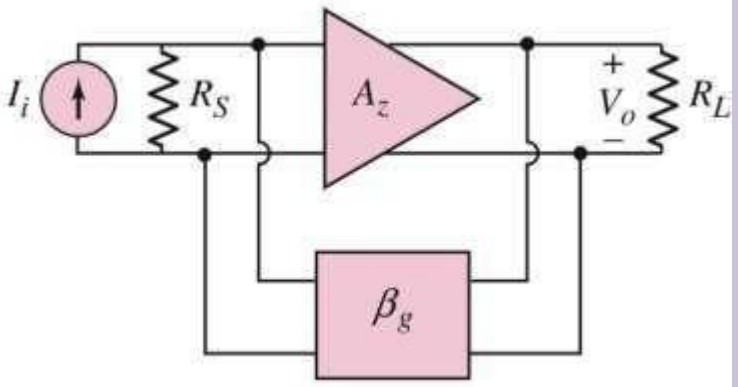

(d) Shunt–shunt

Shunt:
connecting the feedback signal

in shunt (parallel) with

Feedback Configuration

an input
current source

Series - Shunt Configuration

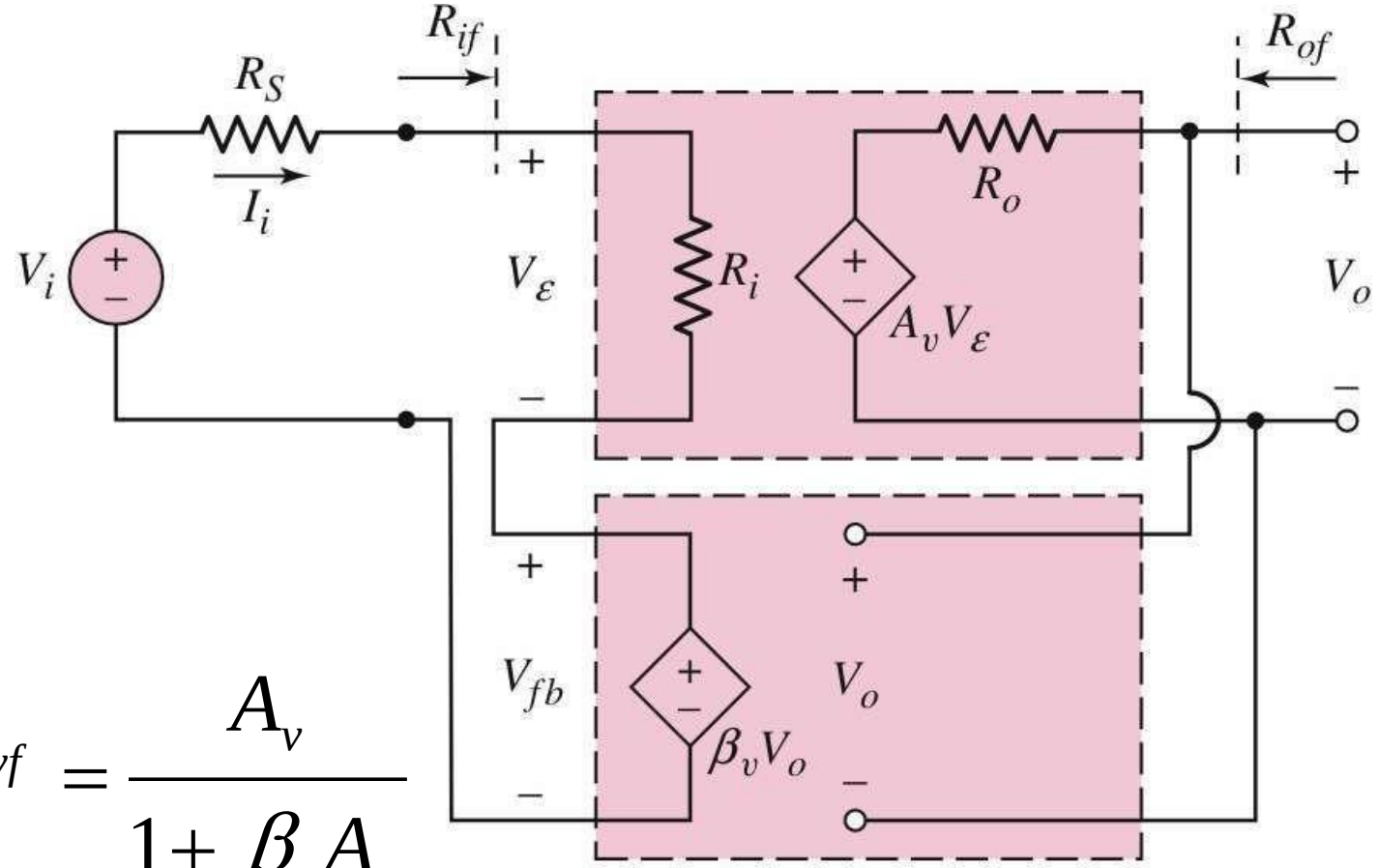

$$A_{vf} = \frac{A_v}{1 + \beta_v A_v}$$

Series - Shunt Configuration

if $\boldsymbol{R_o << R_L}$

then the output of feedback network is an open circuit;
Output voltage is:

$$\boldsymbol{V_o = A_v V_\varepsilon}$$

feedback voltage is:

$$\boldsymbol{V_{fb} = \beta_v V_o}$$

where ßv is closed-loop voltage transfer function

By neglecting R_s due to $\boldsymbol{R_i >> R_s}$ error voltage is:

$$\boldsymbol{V_\varepsilon = V_i - V_{fb}}$$

$$\therefore A_{vf} = \frac{V_o}{V_i} = \frac{A_v}{1 + \beta_v A_v}$$

Series - Shunt Configuration

Input Resistance, R_{if}

Or $V_i = V_\varepsilon + V_{fb} = V_\varepsilon + \beta_v (A_v V_\varepsilon)$

$$V_\varepsilon = \frac{V_i}{(1+\beta_v A_v)}$$

- Inp

$$I_i = \frac{V_\varepsilon}{R_i} = \frac{V_i}{R_i(1+\beta_v A_v)}$$

- R_{if} with feedback

$$R_{if} = \frac{V_i}{I_i} = R_i (1+\beta_v$$

Output Resistance, R_{of}

Assume Vi=0 and Vx applied to output terminal.

Or $V_\varepsilon + V_{fb} = V_\varepsilon + \beta_v V_x = 0$

$$V_\varepsilon = -\beta V_x$$

- Input current

$$I = \frac{V_x - A_v V_\varepsilon}{R_o} = \frac{V_x (1+\beta_v A_v)}{R_o}$$

- R_i

Series - Shunt Configuration

$$R_{of} = \frac{V_x}{I_x} = \frac{R_o}{(1 + A_v)}$$

$$\beta_v = \frac{}{}$$

Series - Shunt Configuration

- Series input connection increase input resistance – avoid loading effects on the input signal source.
- Shunt output connection decrease the output resistance - avoid loading effects on the output signal when output load is connected

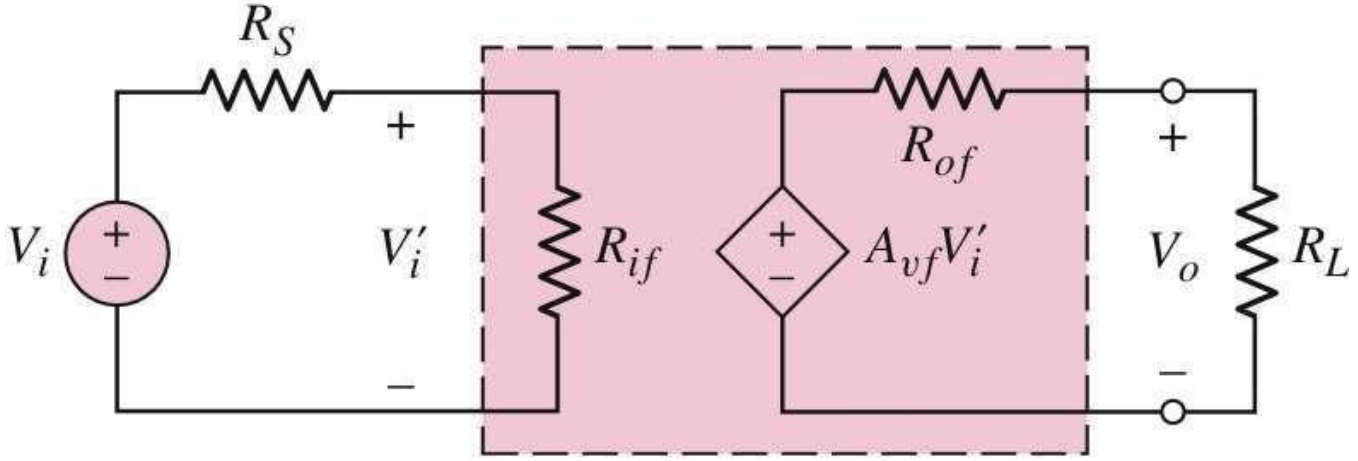

Equivalent circuit of shunt - series feedback circuit or voltage amplifier

Series - Shunt Configuration

- Non-inverting op-amp is an example of the series-shunt configuration.

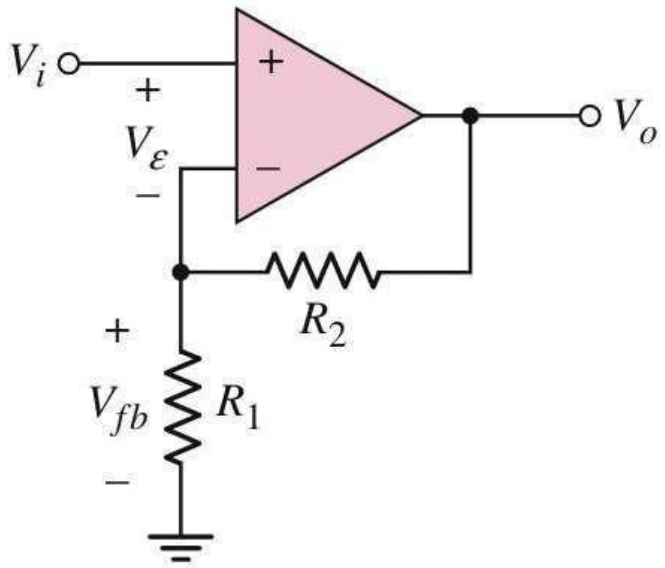

For ideal non-inverting op-amp amplifier

$$A_{vf} = \frac{V_o}{V_i} = \left(1 + \frac{R_2}{R_1}\right)$$

Feedback transfer function;

$$\beta = \frac{1}{\left(\frac{R_2}{}\right)}$$

Series - Shunt Configuration

$$\left(1+\frac{}{R_1}\right)$$

Series - Shunt Configuration

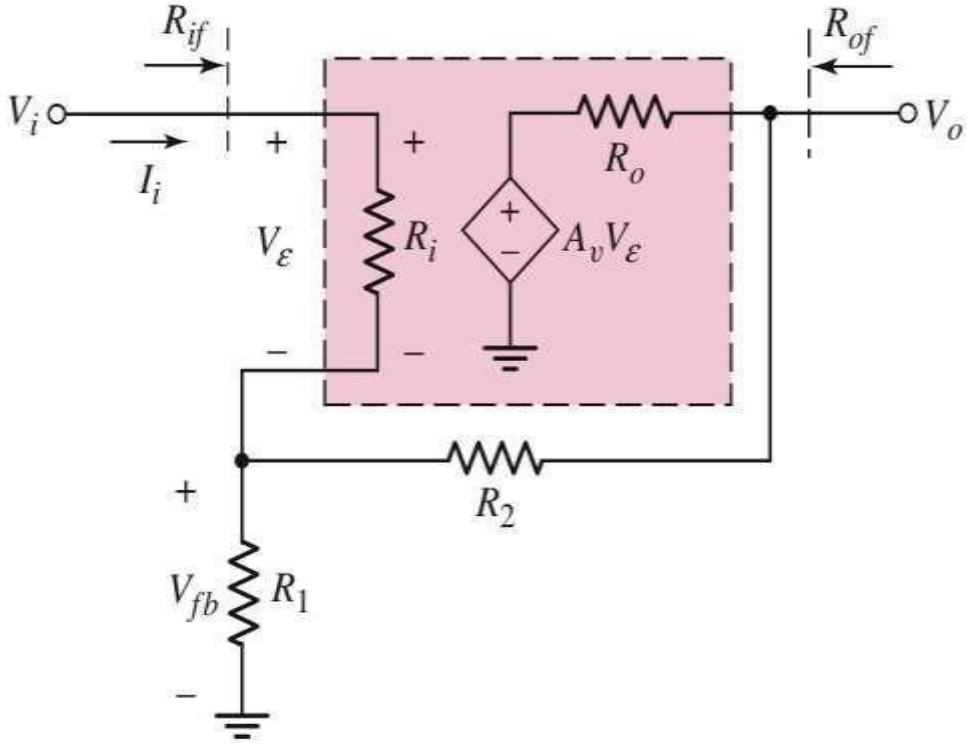

$$\boldsymbol{V_o} = \boldsymbol{A_v V_\varepsilon}$$

$$\boldsymbol{V_\varepsilon} = V_i - V_{fb}$$

$$V_{fb} \cong \left(\frac{R_1}{R_1 + R_2} \right) V_o$$

$$A_{vf} = \frac{V_o}{V_i} = \frac{A_v}{1 + \left(\frac{A_v}{\frac{R_1}{R_1 + R_2}} \right)} = \frac{A_v}{1 + \beta A_v}$$

$$V_i = V_\varepsilon + \left(\frac{R_1}{R + R} \right) V_o = V_\varepsilon + \frac{A_v V_\varepsilon}{\left(\frac{R}{} \right)}$$

Series - Shunt Configuration

Equivalent circuit

$$R_{if} = \frac{V_i}{I_i} = \frac{V_i}{V_{\varepsilon i} / R_i} = R_i(1+\beta A_v)$$

Series - Shunt Configuration

Example:

Calculate the feedback amplifier gain of the circuit below for op-amp gain, A=100,000; R1=200 Ω and R2=1.8 kΩ.

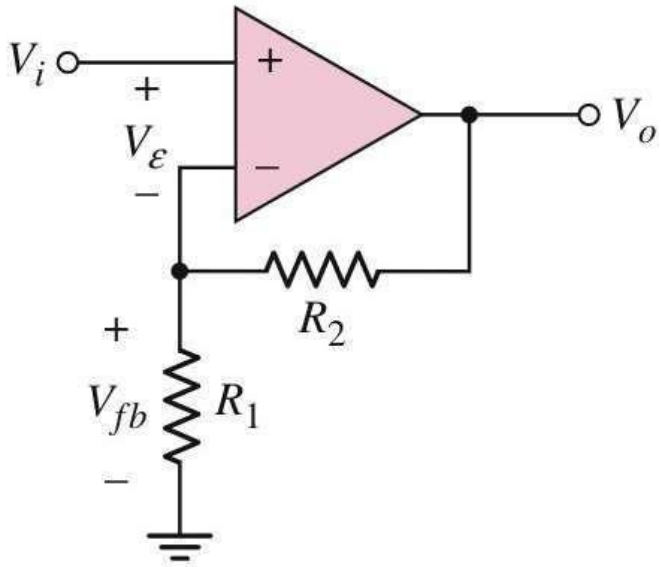

Solution: A_{vf} = 9.999 or 10

Series - Shunt Configuration

- Basic emitter-follower and source-follower circuit are examples of discrete-circuit series-shunt feedback topologies.

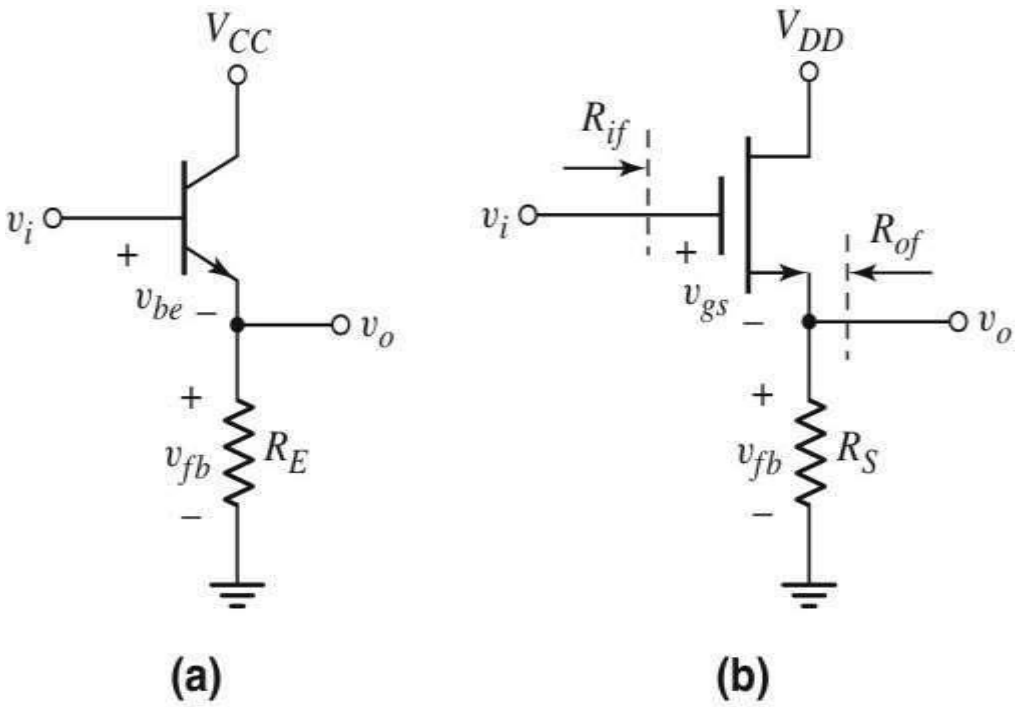

- v_i is the input signal
- error signal is base-emitter/gate-source voltage.
- feedback voltage = output voltage → feedback transfer function, $\beta_v = 1$

Series - Shunt Configuration

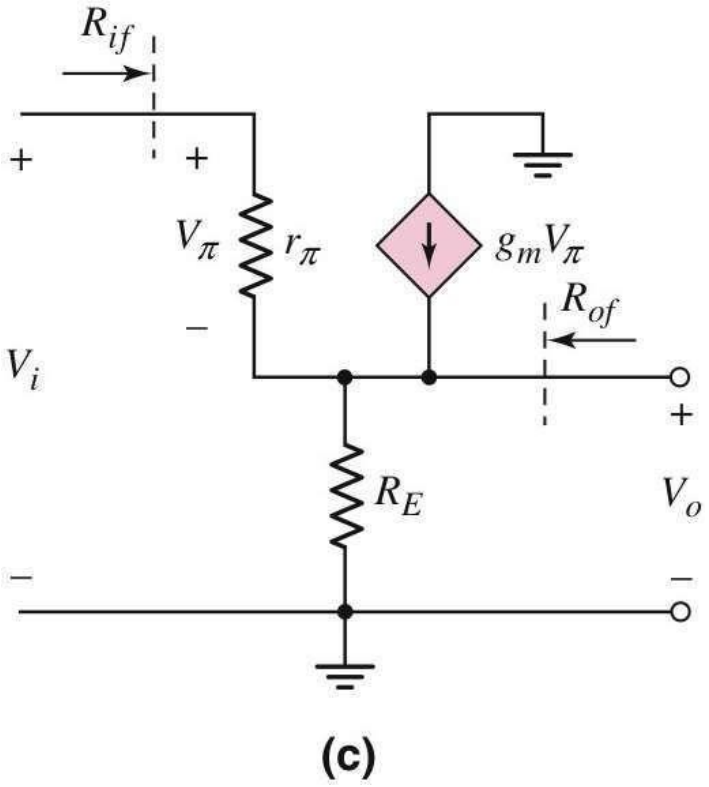

(c)

- Small-signal voltage gain:

$$A_{vf} = \frac{V_o}{V_i} = \frac{\left(\frac{1}{r_\pi} + g_m\right) R_E}{1 + \left(\frac{1}{r_\pi} + g_m\right) R_E} = \frac{\frac{R_E}{r_e}}{1 + \frac{R_E}{r_e}}$$

- Open-loop voltage gain:

$$A_v = \left(\frac{1}{r_\pi} + g_m\right) R_E = \frac{R_E}{r_e}$$

- Closed-loop input resistance:

$$R_{if} = r_\pi + (1 + g_m r_\pi) R_E = r_\pi \left[1 + \left(\frac{1}{r_\pi} + g_m\right) R_E\right]$$

Series - Shunt Configuration

- Output resistance:

$$R_{of} = R_E \left\| \frac{r_\pi}{(1+g_m r_\pi)} \right. = \frac{R_E}{1+\left(\frac{1}{r_\pi} + g_m\right) R_E}$$

Shunt – Series Configuration

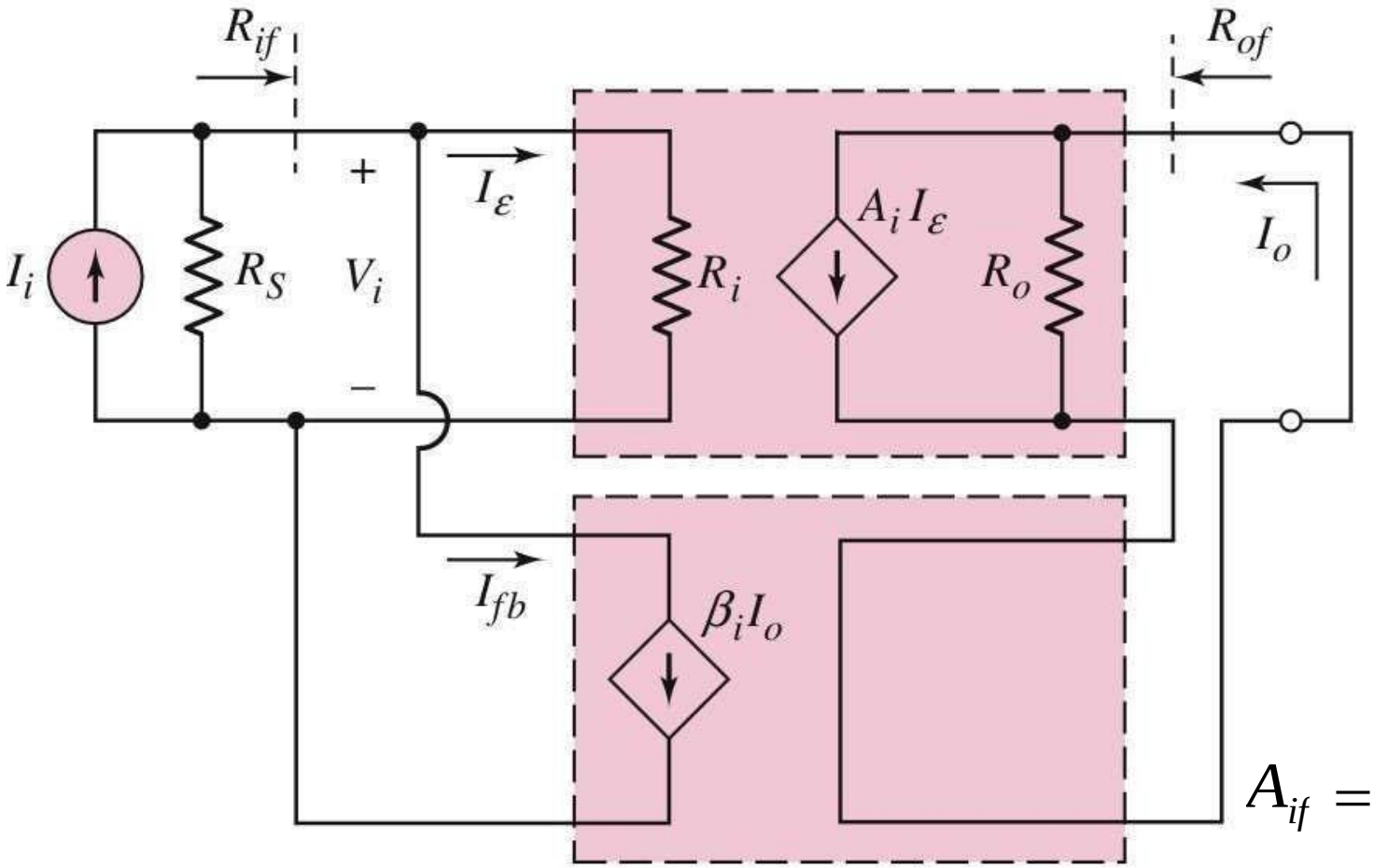

$$A_{if} = \frac{A_i}{1 + \beta_i A_i}$$

Shunt – Series Configuration

- Basic current amplifier with input resistance, Ri and an open-loop current gain, Ai.
- Current I_E is the difference between input signal current and feedback current.
- Feedback circuit samples the output current – provide feedback signal in shunt with signal current.
- Increase in output current – increase feedback current – decrease error current.
- Smaller error current – small output current – stabilize output signal.

Shunt – Series Configuration

if $R_i << R_s$ then $I_i \approx I_\varepsilon$

then the output is a short circuit; output current is:

$$I_o = A_i I_\varepsilon$$

feedback current is:

$$I_{fb} = \beta_i I_o$$

where ßi is closed-loop current transfer function

Input signal current:

$$I_i = I_\varepsilon + I_{fb}$$

$$\therefore A_{if} = \frac{I_o}{} = \frac{A_i}{}$$

Shunt – Series Configuration

Input Resistance, R_{if}

O $\boldsymbol{I}_i = I_\varepsilon + I_{fb} = I_\varepsilon + \beta_i (A_i I_\varepsilon)$

$$I_\varepsilon = \frac{I}{(1+\beta_i A_i)}$$

- Inp

$$V_i = I_\varepsilon R_i = \frac{I_i R_i}{(1+\beta_i A_i)}$$

- R_{if} with feedback

Output Resistance, R_{of}

Assume I_i=0 and I_x applied to output terminal.

$$I_\varepsilon + I_{fb} = I_\varepsilon + \beta_i I_x = 0$$

$$I_\varepsilon = -\beta_i I_x$$

$$V_x = (I_x - A_i I_\varepsilon) R_o$$

$$V_x = \left[I_x - A_i(-\beta_i I_x)\right] R_o$$

$$V_x = I_x (1+\beta_i A_i) R_o$$

- R_{of} with feedback

Shunt – Series Configuration

$$R_{if} = \frac{V_i}{I_i} = \frac{R_i}{(1+\beta_i A_i)} \qquad \left(R_{of} = \frac{V_x}{I_x} = R_o\,(1+\beta_i A_i)\right)$$

Shunt - Series Configuration

- Shunt input connection decrease input resistance – avoid loading effects on the input signal current source.
- Series output connection increase the output resistance - avoid loading effects on the output signal due to load connected to the amplifier output.

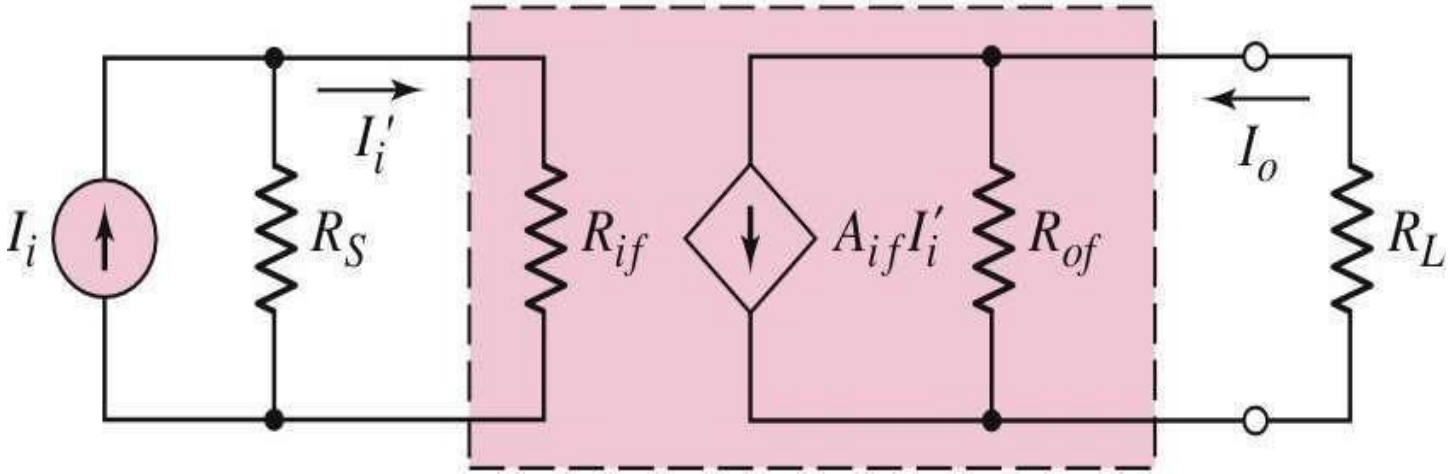

Shunt - Series Configuration

- Op-amp current amplifier – shunt-series configuration.
- I_i' from equivalent source of I_i and R_s is negligible and $R_s >> R_i$;

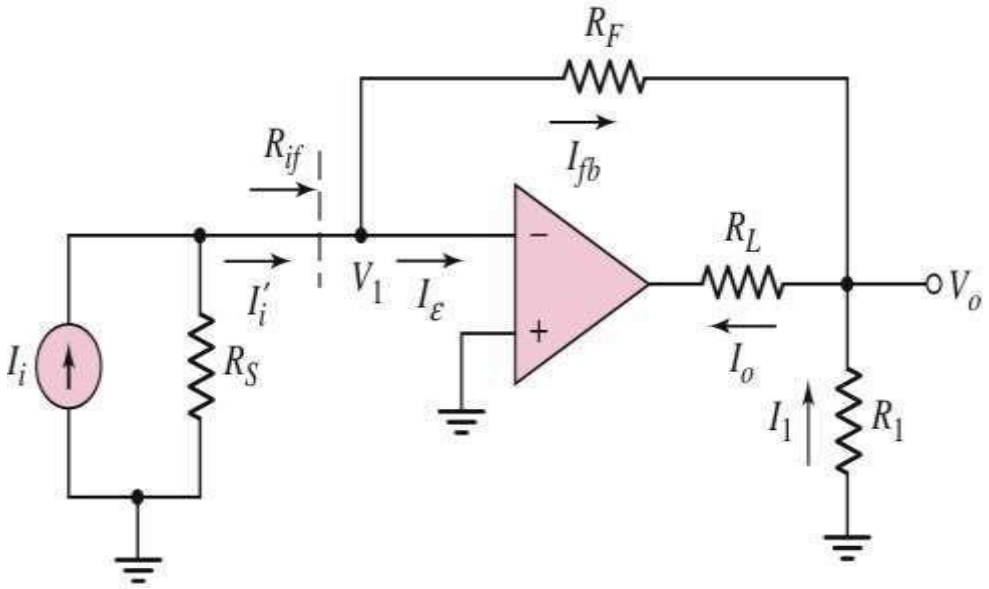

- ε is negligible and $R_s >> R_i$;

$$I_i = I_i' = I_{fb}$$

- assume V_1 virtually ground;

$$V_o = -I_{fb} R_F = -I_i R_F$$

- Current I_1:

$$I_1 = -V_o / R_1$$

- Output current:

$$I_o = I_{fb} + I_1 = I_i \left(1 + \frac{R_F}{R_1}\right)$$

- Ideal current gain:

Shunt - Series Configuration

$$A_i = \frac{I_o}{I_i} = \left(1 + \frac{R_F}{R_1}\right)$$

Shunt - Series Configuration

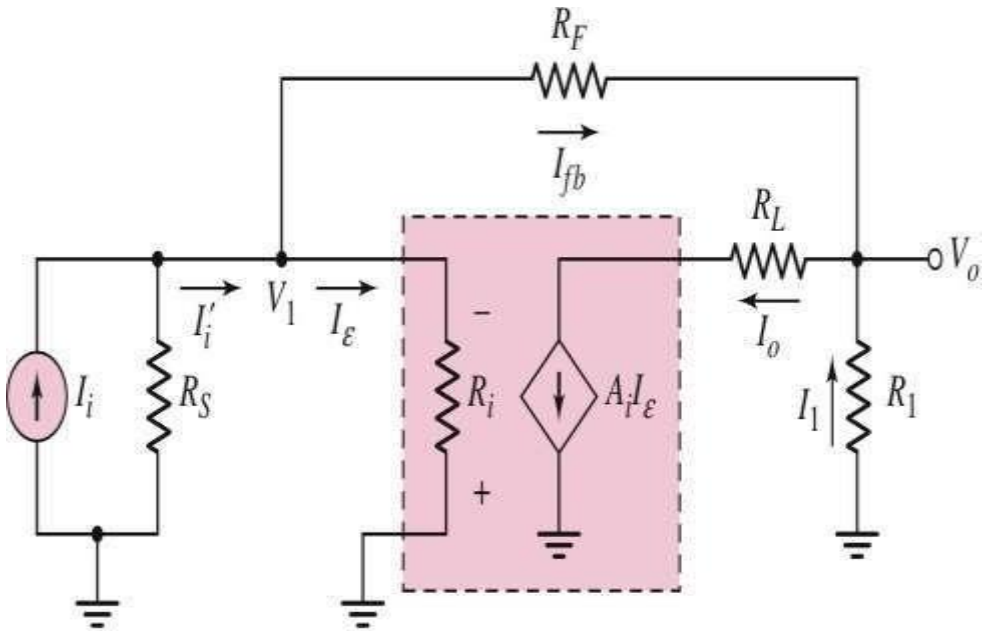

- Ai is open-loop current gain. $I_\varepsilon = I_i' - I_{fb} \cong I_i - I_{fb}$

$$I_o = A_i I_\varepsilon = A_i (I_i - I_{fb})$$

and

- Assume V_1 is virtually ground: $V_1 = -I_{fb} R_F$
- I_1 current: $I_1 = -\dfrac{V_o}{R_1} = I_{fb}\left(\dfrac{R_F}{R_1}\right)$
- Output current $I_o = I_{fb} + I_1 = I_{fb} + I_{fb}\left(\dfrac{R_F}{R_1}\right)$

Closed-loop current gain:

$$A_{if} = \frac{I_o}{I_i} = \frac{A_i}{1 + \frac{A_i}{\left(\frac{R_F}{R_1}\right)}}$$

Shunt - Series Configuration

$$\left(1+\frac{\square_F}{R_1}\right)^{-1}$$

Shunt - Series Configuration

- Common-base circuit is example of discrete shunt-series configuration.

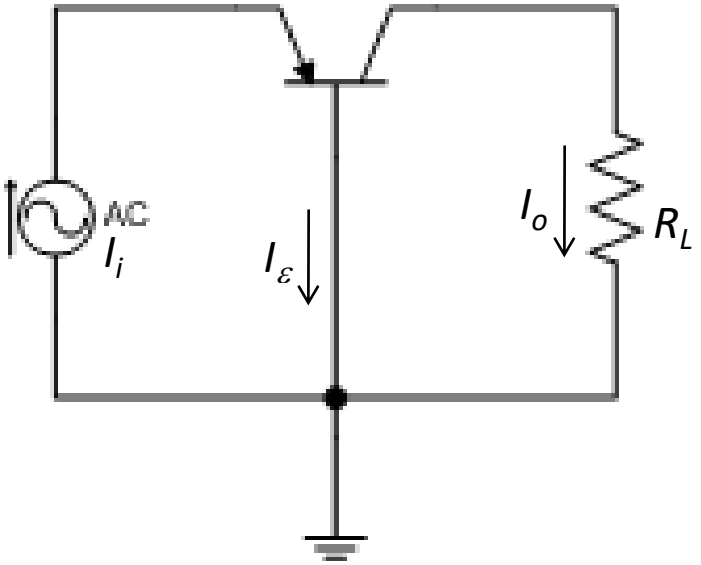

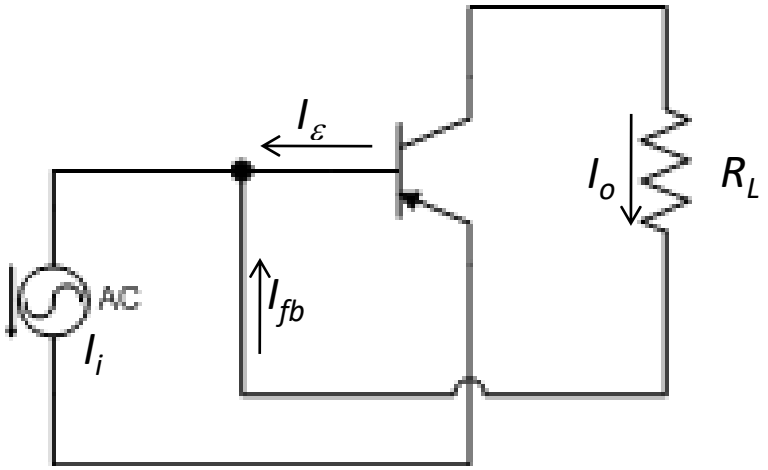

- Amplifier gain:

$$I_o / I_i = A = \beta$$

Closed-loop current gain:

$$A_f = \frac{I_o}{I_i} = \frac{A}{1 + \beta A} = \frac{A_i}{\quad}$$

Shunt - Series Configuration

ε_i if $1+\beta_i$ $1-A_i$

Shunt - Series Configuration

- Common-base circuit with R_E and R_C

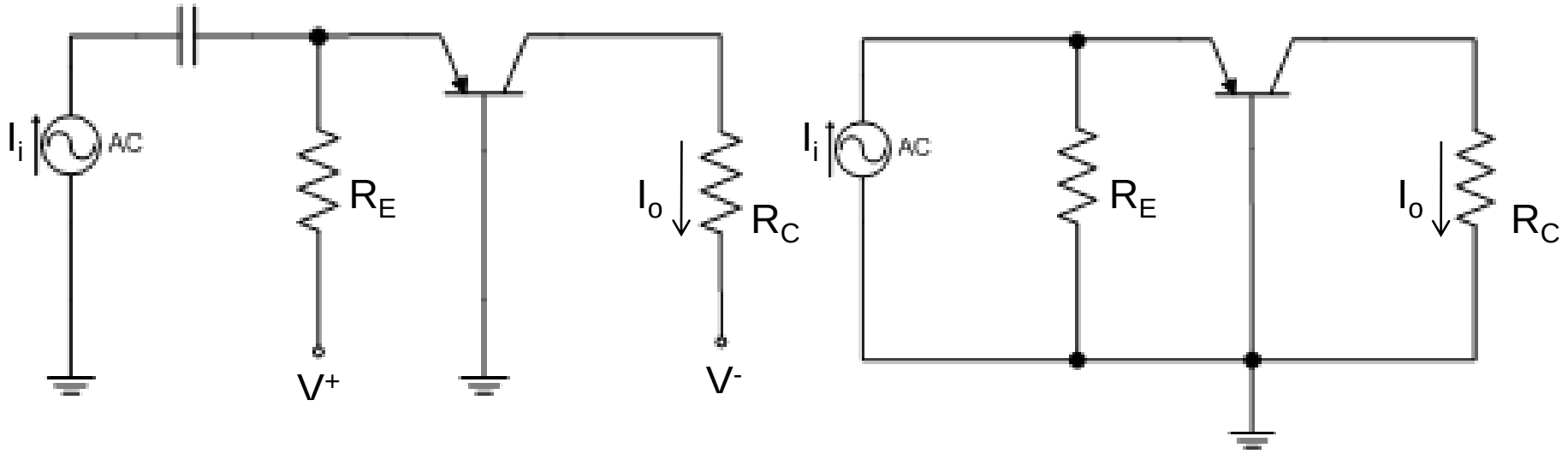

$$A_{if} = \frac{I_o}{I} = \frac{g_m r_\pi}{\left(\frac{r}{\quad}\right)} = \frac{A_i}{\left(\frac{r}{\quad}\right)}$$

Shunt - Series Configuration

$$i = \left(1 + \frac{\pi}{R}\right) + \left(g_m r_\pi\right) \left(1 + \frac{\pi}{R}\right) + A_i$$

Series – Series Configuration

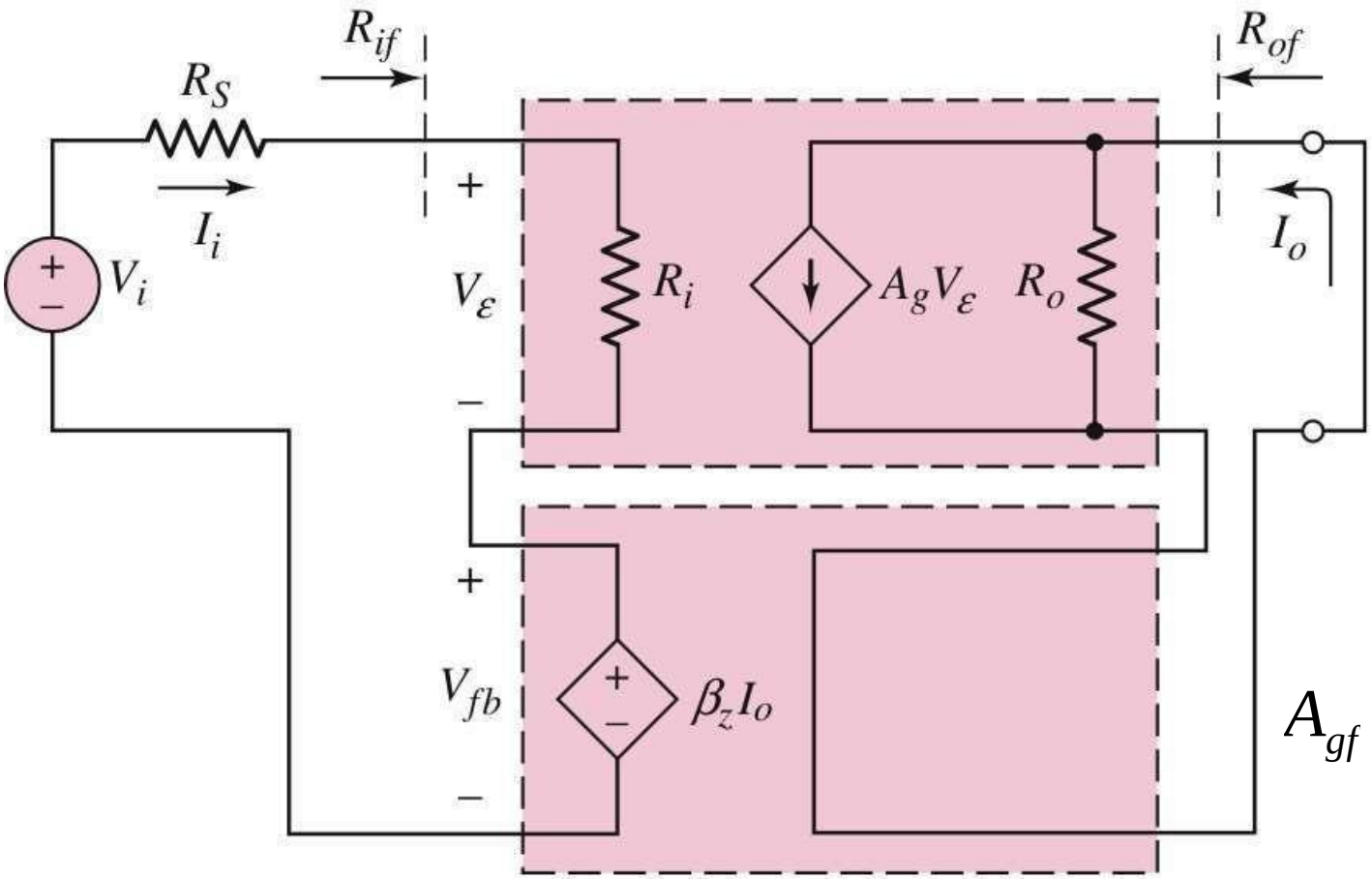

$$A_{gf} = \frac{A_g}{1 + \beta_g A_g}$$

Series – Series Configuration

- The feedback samples a portion of the output current and converts it to a voltage – voltage-to-current amplifier.
- The circuit consist of a basic amplifier that converts the error voltage to an output current with a gain factor, A_g and that has an input resistance, R_i.
- The feedback circuit samples the output current and produces a feedback voltage, V_{fb}, which is in series with the input voltage, V_i.

Series – Series Configuration

Assume the output is a short circuit, the output current:

$$\boldsymbol{I_o = A_g V_\varepsilon}$$

feedback voltage is:

$$\boldsymbol{V_{fb} = \beta_z I_o}$$

where ßz is a resistance feedback transfer function

Input signal voltage (neglect Rs=∞):

$$\boldsymbol{V_i = V_\varepsilon + V_{fb}}$$

$$\therefore A_{gf} = \frac{I_o}{V_i} = \frac{A_a}{1 + \beta_z A_g}$$

Series – Series Configuration

Input Resistance, R_{if}

$$V_i = V_\varepsilon + V_{fb} = V_\varepsilon + \beta_z (A_g V_\varepsilon)$$

$$V_\varepsilon = \frac{V_i}{(1+\beta_z A_g)}$$

- Inp

$$I_i = \frac{V_\varepsilon}{R_i} = \frac{V_i}{R_i(1+\beta_z A_g)}$$

- R_{if} with feedback

Output Resistance, R_{of}

Assume I_i=0 and I_x applied to output terminal.

$$I_\varepsilon + I_{fb} = I_\varepsilon + \beta_z I_x = 0$$

$$I_\varepsilon = -\beta_z I_x$$

$$V_x = (I_x - A_g I_\varepsilon) R_o$$

$$V_x = \left[I_x - A_g(-\beta_z I_x) \right] R_o$$

$$V_x = I_x (1+\beta_z A_g) R_o$$

- R with feedback

Series – Series Configuration

$$R_{if} = \frac{V_i}{I_i} = R_o(1+\beta_z A_g) \qquad R_{of} = \frac{V_x}{I_x} = R_o\left(1+\beta_z A_g\right)$$

Series – Series Configuration

- Series input connection increase input resistance
- Series output connection increase the output resistance

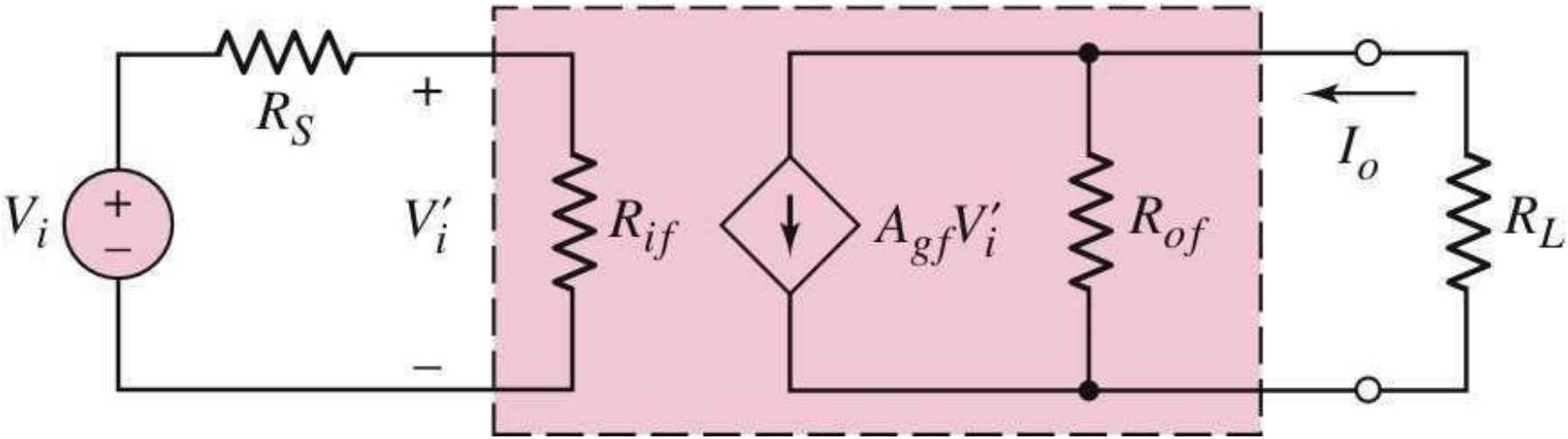

Equivalent circuit of series - series feedback circuit or voltage amplifier

Series – Series Configuration

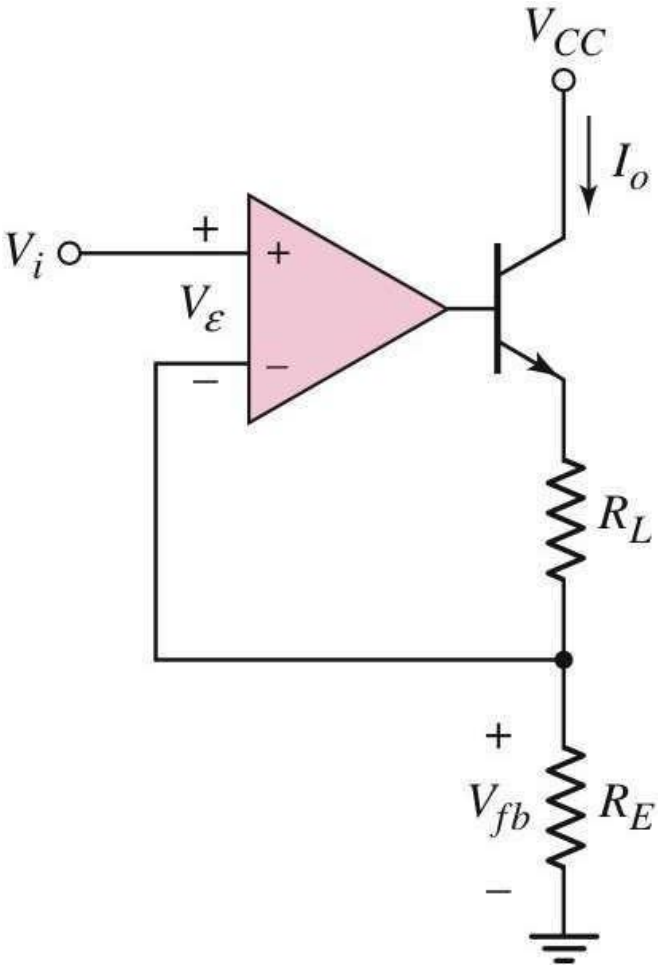

- The series output connection samples the output current → feedback voltage is a function of output current.
- Assume ideal op-amp circuit and neglect transistor base-

$$\boldsymbol{V}_i = V_{fb} = I_o R_E$$

$$A_{gf} = \frac{I_o}{V_i} = \frac{1}{R_E}$$

Series – Series Configuration

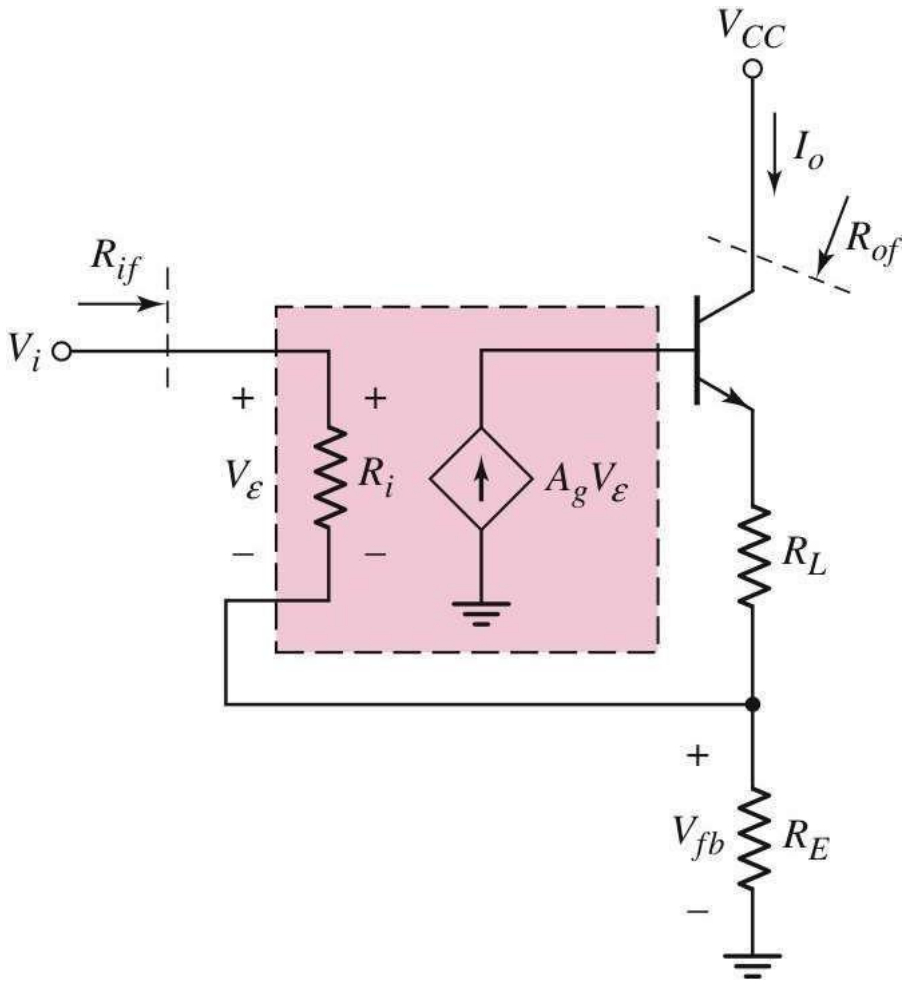

- Assume $I_E \cong I_C$ and $R_i \approx \infty$

$$I_o = \frac{V_{fb}}{R_E} = g_m r_\pi I_b = g_m r_\pi A_g V_\varepsilon$$

$$V_\varepsilon = V_i - V_{fb} = V_i - I_o R_E$$

$$I_o = g_m r_\pi A_g \left(V_i - I_o R_E\right)$$

$$A_{gf} = \frac{I_o}{V_i} = \frac{g_m r_\pi A_g}{1 + \left(g_m r_\pi A_g\right) R_E}$$

Series – Series Configuration

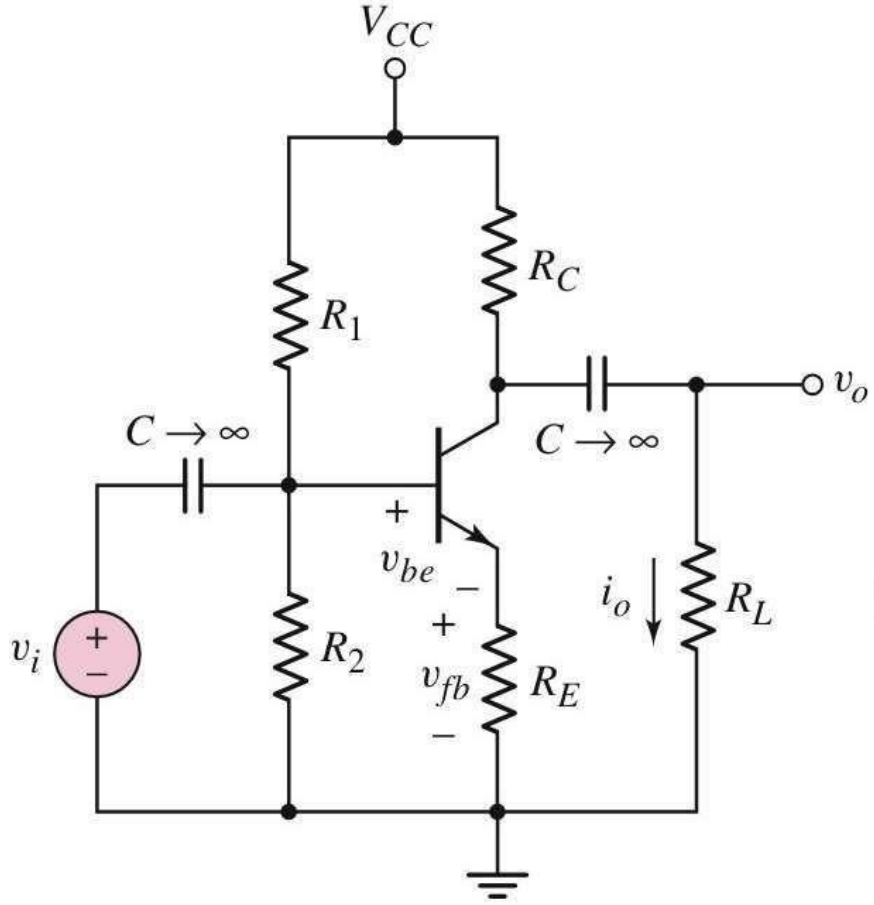

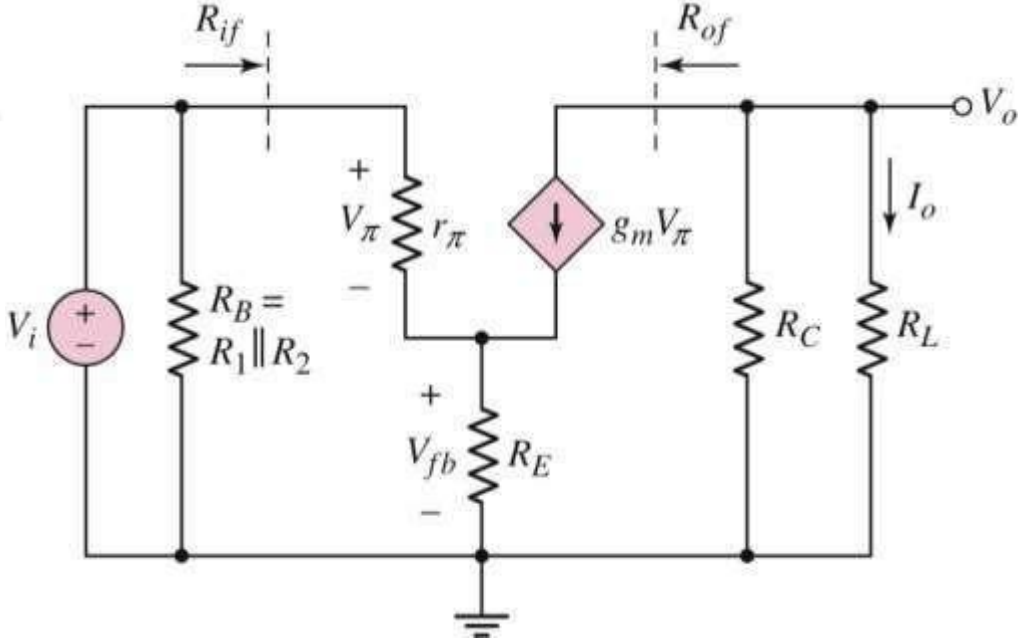

Series – Series Configuration

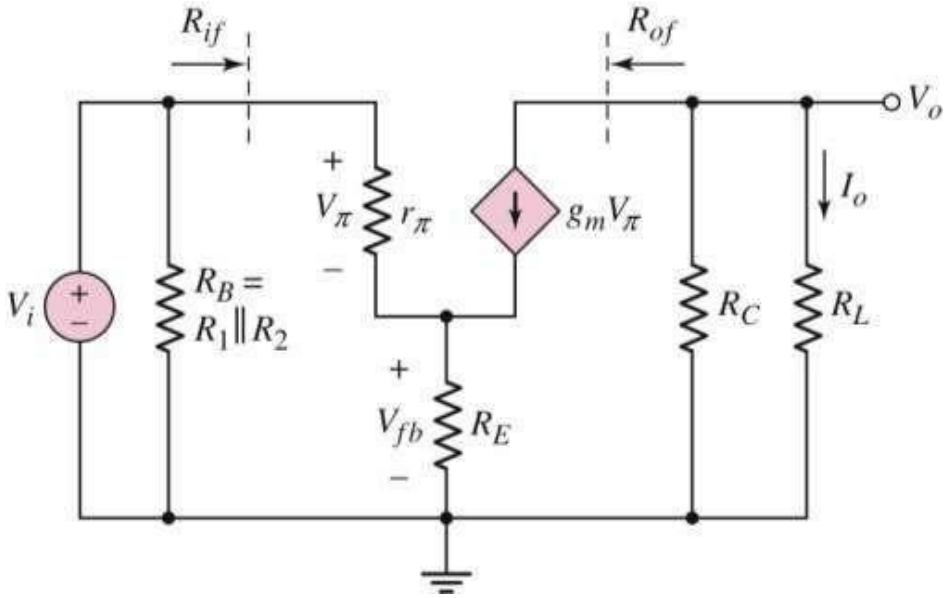

$$I_o = -(g_m V_\pi)\left(\frac{R_C}{R_C + R_L}\right)$$

$$V_{fb} = \left(\frac{V_\pi}{r_\pi} + g_m V_\pi\right) R_E$$

$$V_i = V_\pi + V_{fb} = V_\pi\left(1 + \left(\frac{1}{r_\pi} + g_m\right) R_E\right)$$

$$\frac{I_o}{} \quad -g_m \left(\frac{R_C}{R} + R\right)$$

Series – Series Configuration

$$A_{gf} = \frac{V_o}{V_i} = \frac{g_m R_E}{1 + \left(\frac{1}{r_\pi} + g_m\right) R_E}$$

Shunt – Shunt Configuration

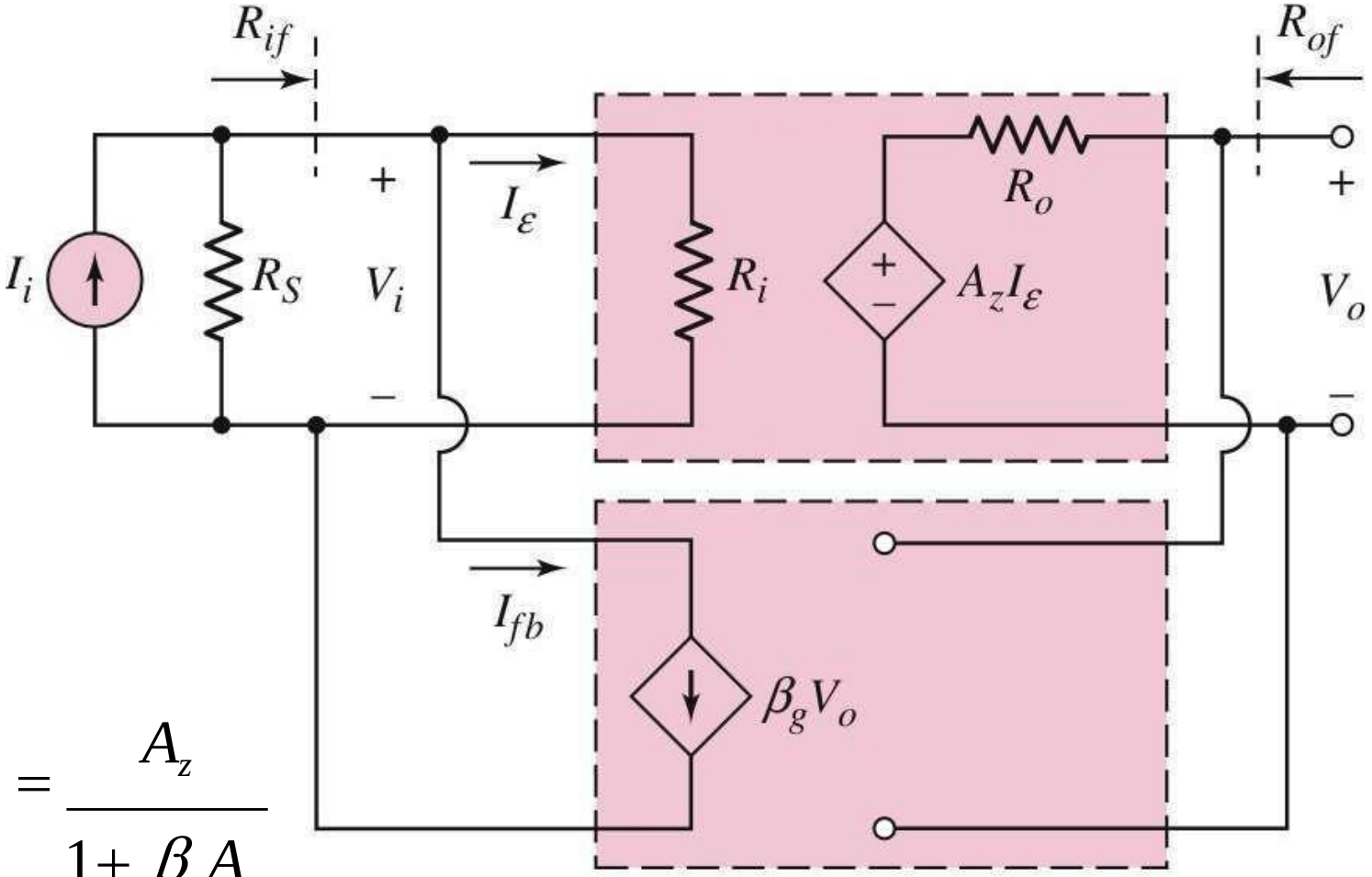

$$A_{zf} = \frac{A_z}{1 + \beta_z A_z}$$

Shunt – Shunt Configuration

- The feedback samples a portion of the output voltage and converts it to a current – current-to-voltage amplifier.
- The circuit consist of a basic amplifier that converts the error current to an output voltage with a gain factor, A_z and that has an input resistance, R_i.
- The feedback circuit samples the output voltage and produces a feedback current, I_{fb}, which is in shunt with the input current, I_i.

Shunt – Shunt Configuration

Assume the output is a open circuit, the output voltage:

$$\boldsymbol{V_o = A_z I_\varepsilon}$$

feedback voltage is:

$$\boldsymbol{I_{fb} = \beta_g V_o}$$ where ßg is a conductance feedback transfer function

Input signal voltage (neglect Rs=∞):

$$\boldsymbol{I_i = I_\varepsilon + I_{fb}}$$

Shunt-Shunt Configuration

$$\therefore A_{zf} = \frac{V_o}{I_i} = \frac{A_z}{1 + \beta_g A_z}$$

Shunt – Shunt Configuration

Input Resistance, R_{if}

O $I_i = I_\varepsilon + I_{fb} = I_\varepsilon + \beta_g (A_z I_\varepsilon)$

$$I_\varepsilon = \frac{I_i}{(1+\beta_g A_z)}$$

- Inp

$$V_i = I_\varepsilon R_i = \frac{I_i R_i}{(1+\beta_g A_z)}$$

- R_{if} with feedback

$$R = \frac{V_i}{} = \frac{R_i}{}$$

Output Resistance, R_{of}

Assume Vi=0 and Vx applied to output terminal.

Or $V_\varepsilon + V_{fb} = V_\varepsilon + \beta_g V_x = 0$

$$V = -\beta V$$

- In $\varepsilon \quad g \quad x$

- R_o $I_i = \frac{V_x - A_z V_\varepsilon}{R_o} = \frac{V_x (1+\beta_g A_z)}{R_o}$

$$R = \frac{V_x}{} = R_o$$

Shunt – Shunt Configuration

$$\frac{i_f}{i_x} = \frac{(1+\beta_g A_z)}{\quad} \qquad \frac{o_f}{x} = \frac{\quad}{(1+\beta_g A_z)}$$

Shunt – Shunt Configuration

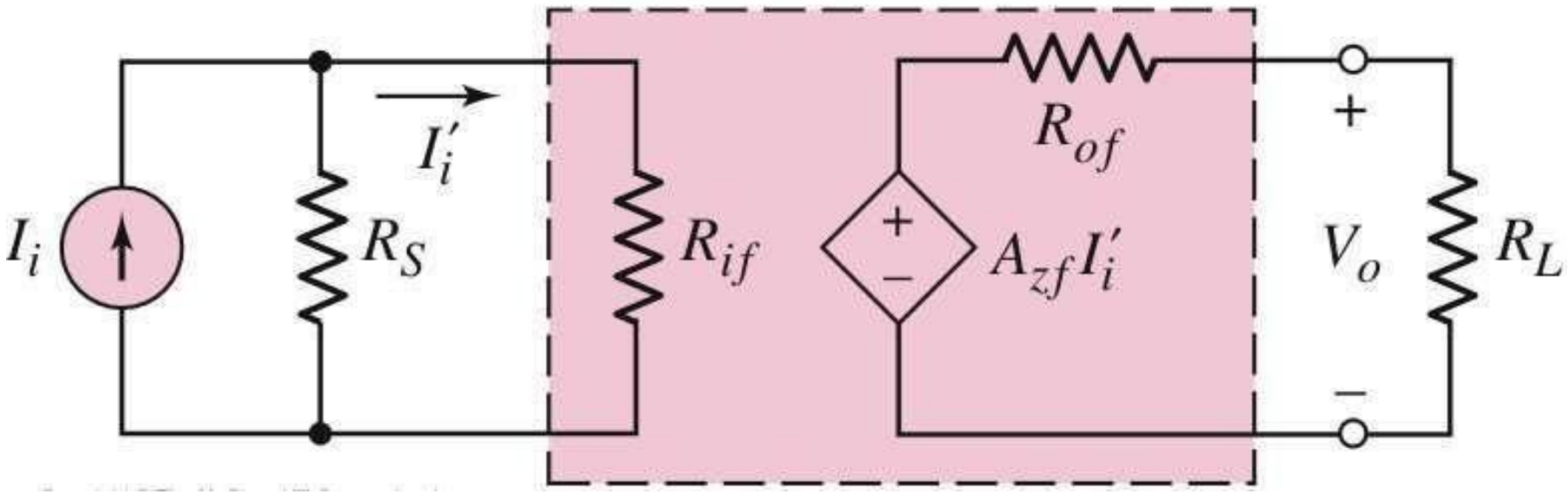

Equivalent circuit of shunt - shunt feedback circuit or voltage amplifier

Shunt – Shunt Configuration

- Basic inverting op-amp circuit is an example of shunt-shunt configuration.

$$V_o = -I_{fb} R_2$$

$$where\ I_{fb} = I_i$$

$$A_{zf} = \frac{V_o}{I_i} = -R_2$$

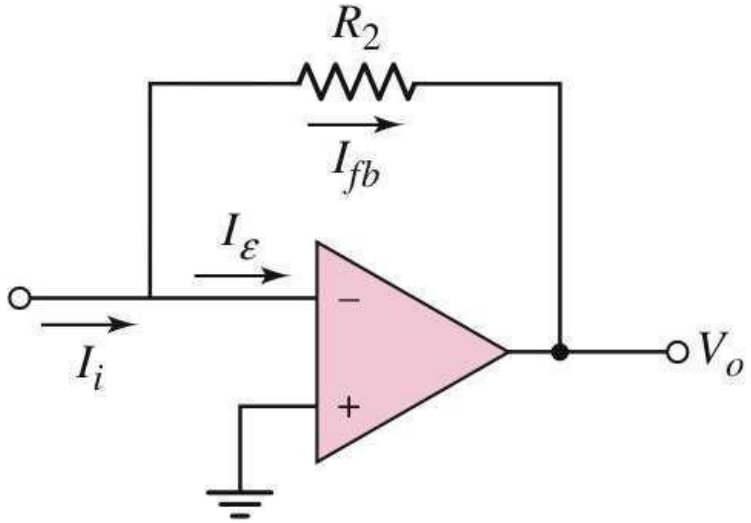

- Input current splits between feedback current and error current.
- Shunt output connection samples the output voltage

Shunt – Shunt Configuration

→ feedback current is function of output voltage.

Shunt – Shunt Configuration

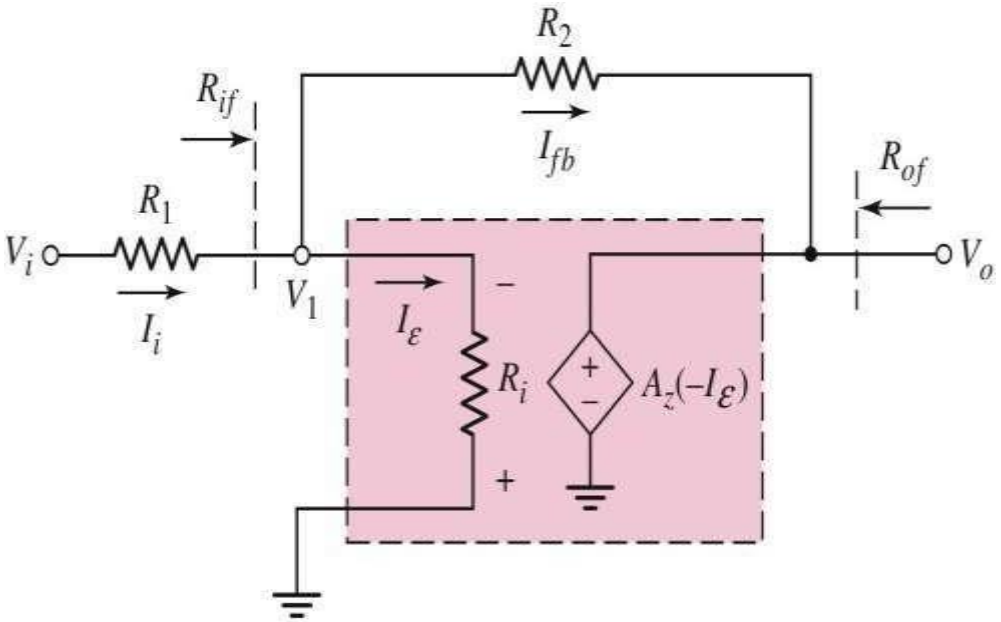

- Az is open-loop transresistance gain factor (-ve value)

$$V_o = A_z I_\varepsilon = -|A_z|\left(I_i - I_{fb}\right)$$

$$where\ I_{fb} = -V_o / R_2$$

$$A_{zf} = \frac{V_o}{I_i} = \frac{-|A_z|}{1+\frac{|A_z|}{R_2}}$$

Shunt – Shunt Configuration

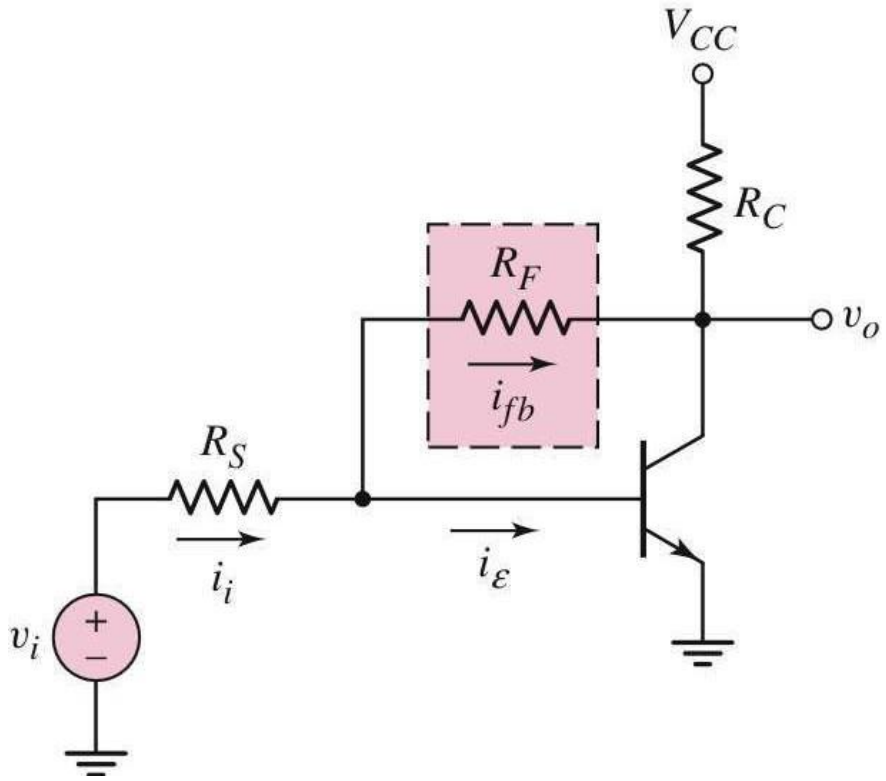

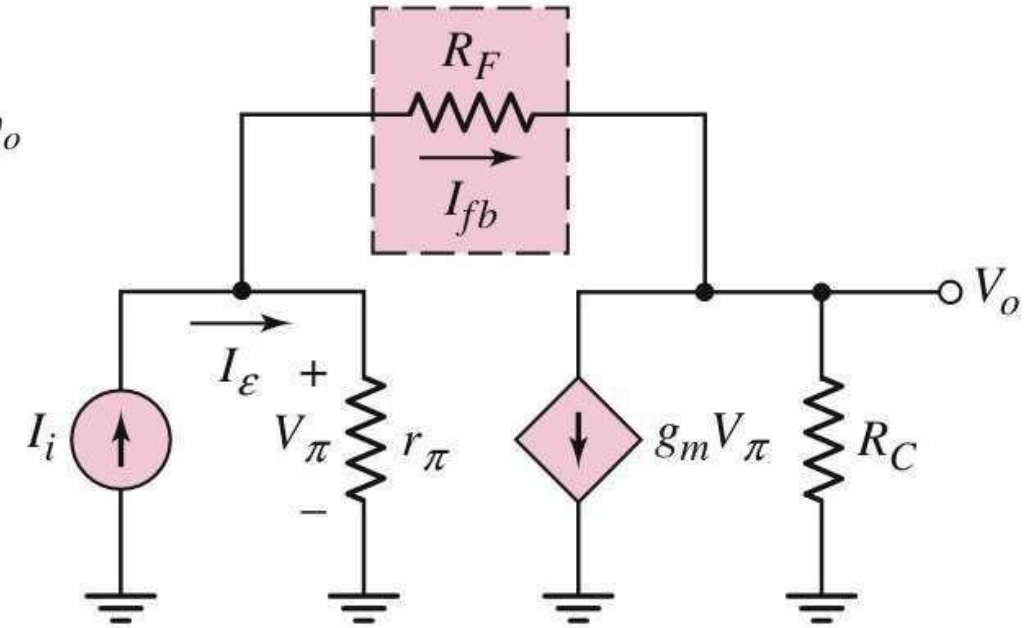

Shunt – Shunt Configuration

$$\frac{V_o}{R_C} + g_m V_\pi + \frac{V_o - V_\pi}{R_F} = 0$$

$$I_i = \frac{V_\pi}{r_\pi} + \frac{V_\pi - V_o}{R_F}$$

$$V_o\left(\frac{1}{R_C} + \frac{1}{R_F}\right)\left(\frac{1}{r_\pi} + \frac{1}{R_F}\right) + \left(g_m - \frac{1}{R_F}\right)\left(I_i + \frac{V_o}{R_F}\right) = 0$$

$$A = \frac{V_o}{} = -\left(g_m -\right.$$

Shunt – Shunt Configuration

$$I_i \left(\frac{1}{R_C} + \frac{1}{R_F} \right) \left\| \left(1 + \frac{1}{r_\pi} \right) \right\| R_F + \left(1 \left\| \frac{1}{g_m - \frac{1}{R_F}} \right. \right.$$

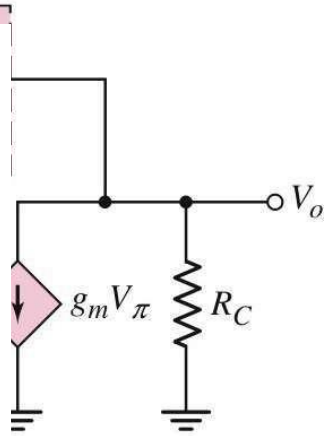

Shunt – Shunt Configuration

- Open-loop transresistance gain factor A_z is found by setting $R_F=\infty$

$$A_z = \frac{-(g_m)}{\left(\frac{1}{R_C}\right)\left(\frac{1}{r_\pi}\right)} = -g_m r_\pi R_C$$

- Multiply by $(r_\pi R_C)$

$$A_{zf} = \frac{V_o}{I_i} = \frac{\left(A_z + \frac{r_\pi R_C}{R_F}\right)}{\left(1+\frac{R_C}{R_F}\right)\left(1+\frac{r_\pi}{R_F}\right) - \left(\frac{1}{R_F}\right)\left(A_z + \frac{r_\pi R_C}{R_F}\right)}$$

- Assume $R_C \ll R_F$

Shunt – Shunt Configuration

& $r_\pi << R_F$

$$A_{zf} = \frac{V_o}{I_i} \cong \frac{(A_z)}{\left(\frac{-1}{1+A_z}\right)\left(R_F\right)}$$

Feedback Amplifier

Input and output Impedances

- **Summary**

1. For a series connection at input or output, the resistance is increased by $(1+\beta A)$.
2. For a shunt connection at input or output, the resistance is lowered by $(1+\beta A)$.

Feedback Amplifier

Feedback amplifier	Source signal	Output signal	Transfer function	Input Resistance	Output Resistance
Series-Shunt (voltage amplifier)	Voltage	Voltage	$A_{vf} = \frac{A_v}{1+\beta_v A_v}$	$(1+\beta_v A_v)R_i$	$\frac{R_o}{(1+\beta_v A_v)}$
Shunt-Series (current amplifier)	Current	Current	$A_{if} = \frac{A_i}{1+\beta_i A_i}$	$\frac{R_i}{(1+\beta_i A_i)}$	$(1+\beta_i A_i)R_o$
Series-Series (transconductance amplifier)	Voltage	Current	$A_{gf} = \frac{A_g}{1+\beta_g A_g}$	$(1+\beta_g A_g)R_i$	$(1+\beta_g A_g)R_o$
Shunt-Shunt (transresistance amplifier)	Current	Voltage	$A_{zf} = \frac{A_z}{1+\beta_z A_z}$	$\frac{R_i}{(1+\beta_z A_z)}$	$\frac{R_o}{(1+\beta_z A_z)}$

Wave shaping & Switching circuits

Chapter 05

Clippers

- **Clipping circuit**: A wave shaping circuit which controls the shape of the output waveform by removing or clipping a portion of the applied wave.
- Half wave rectifier is the simplest example. (It clips negative half cycle).
- Also referred as voltage limiters/ amplitude selectors/ slicers.
- Applications:

  - In radio receivers for communication circuits.

  - In radars, digital computers and other electronic systems.

  - Generation for different waveforms such as trapezoidal, or square waves.

  - Helps in processing the picture signals in television transmitters.

  - In television receivers for separating the synchronising signals from composite picture signals

Types of clippers

- According to non- linear devices used:
  - Diode clippers and Transistor clippers
- According to biasing
  - Biased clippers and Unbiased clippers.
- According to level of clipping
  - Positive clippers, Negative clippers and combination clippers

THUMB RULE

Action of biasing on diode

- When diode is forward biased, it acts as a closed switch (ON state).
- When diode is reverse biased, it acts as a open switch (OFF state).

Series Diode Configurations

Reverse Bias

Diodes ideally behave as open circuits

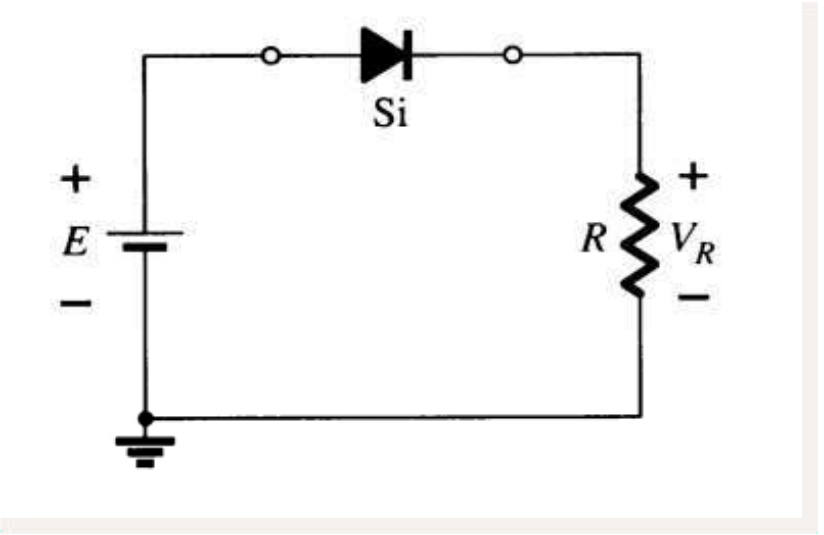

Analysis

- $V_D = E$
- $V_R = 0\,\text{V}$
- $I_D = 0\,\text{A}$

Parallel Configurations

$$V_D = 0.7\ V$$

$$V_{D1} = V_{D2} = V_O = 0.7\ V$$

$$V_R = 9.3\ V$$

$$I_R = \frac{E - V_D}{R} = \frac{10\ V - .7\ V}{.33k\Omega} = 28\ mA$$

$$I_{D1} = I_{D2} = \frac{28\ mA}{2} = 14\ mA$$

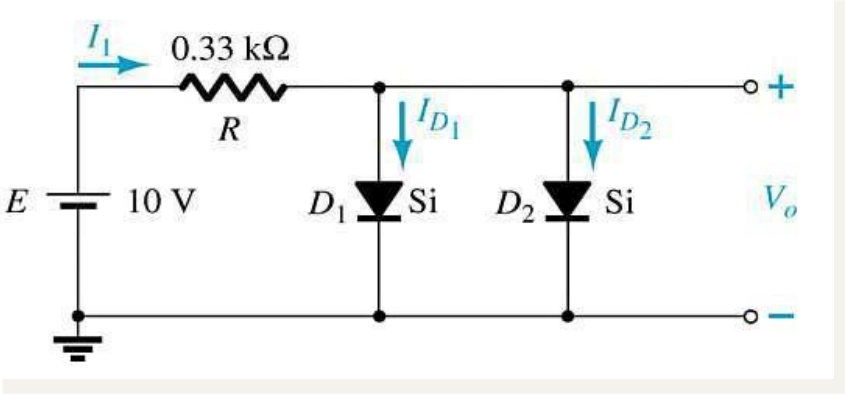

Diode Clippers

The diode in a series clipper "clips" any voltage that does not forward bias it:

- **A reverse-biasing polarity**
- **A forward-biasing polarity less than 0.7 V (for a silicon diode)**

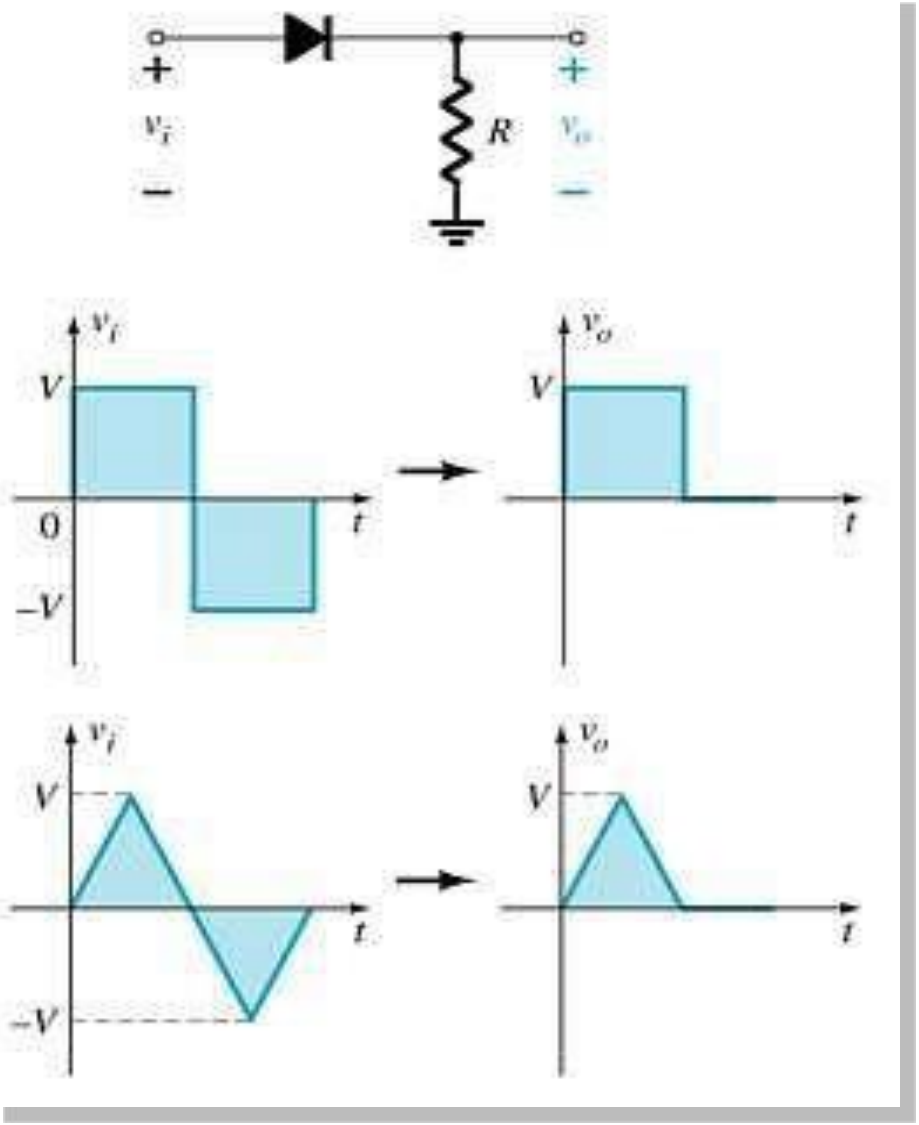

Biased Clippers

Adding a DC source in series with the clipping diode changes the effective forward bias of the diode.

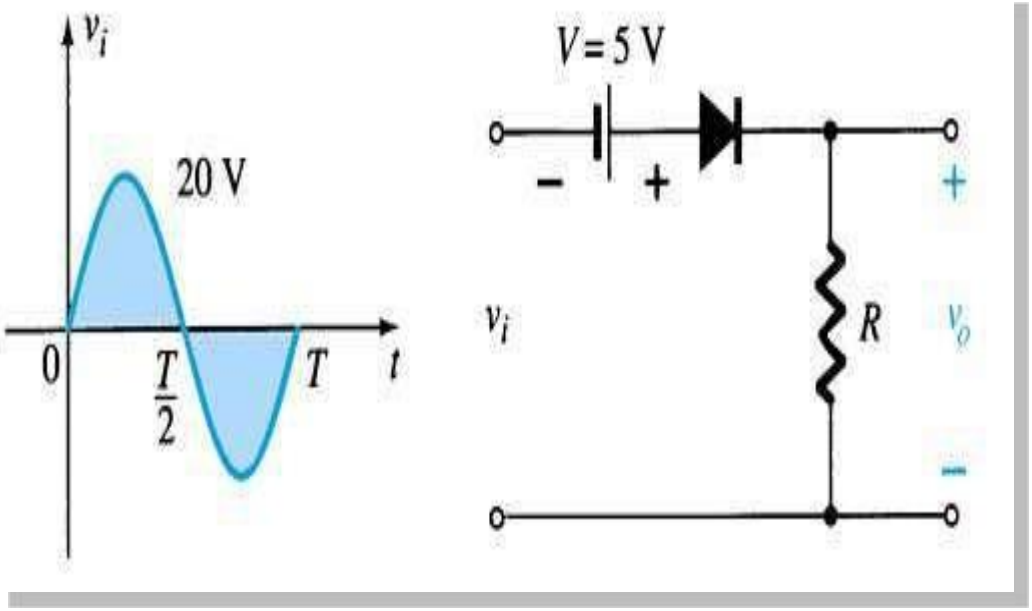

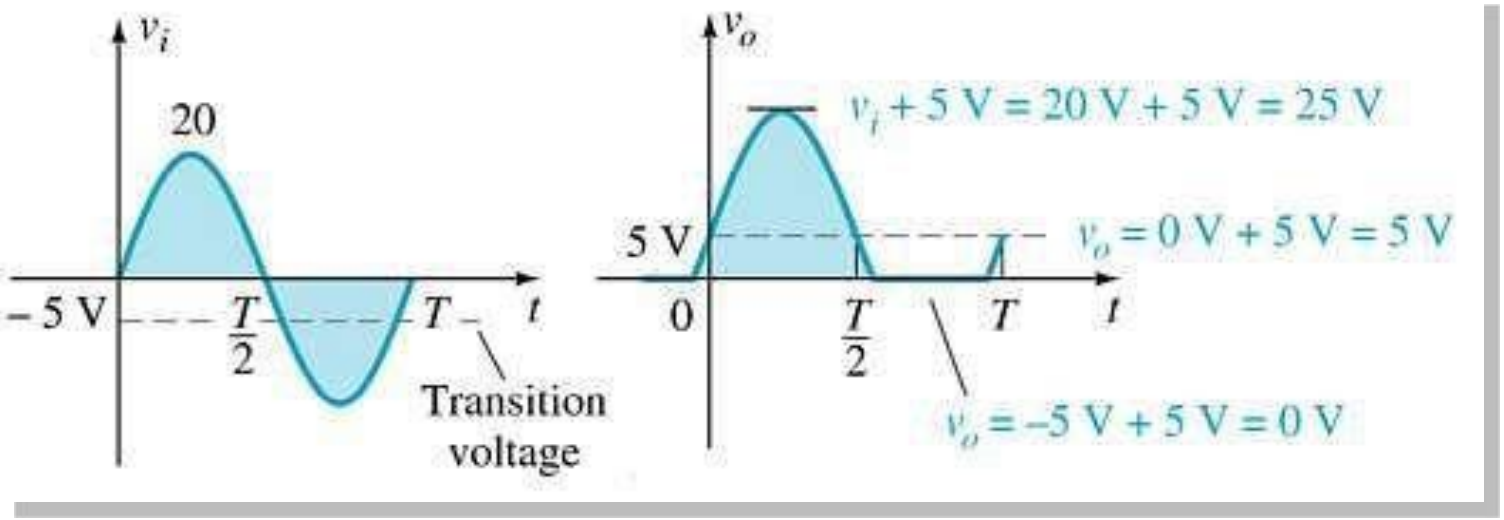

Para

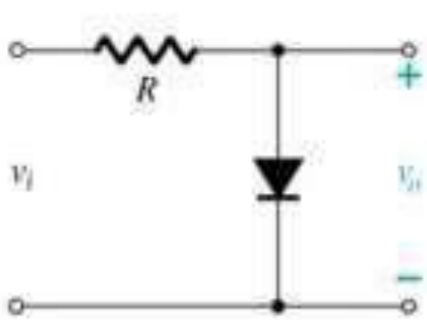

parallel clipper

The diode in a parallel clipper circuit "clips" any voltage that forward bias it.

DC biasing can be added in series with the diode to change the clipping level.

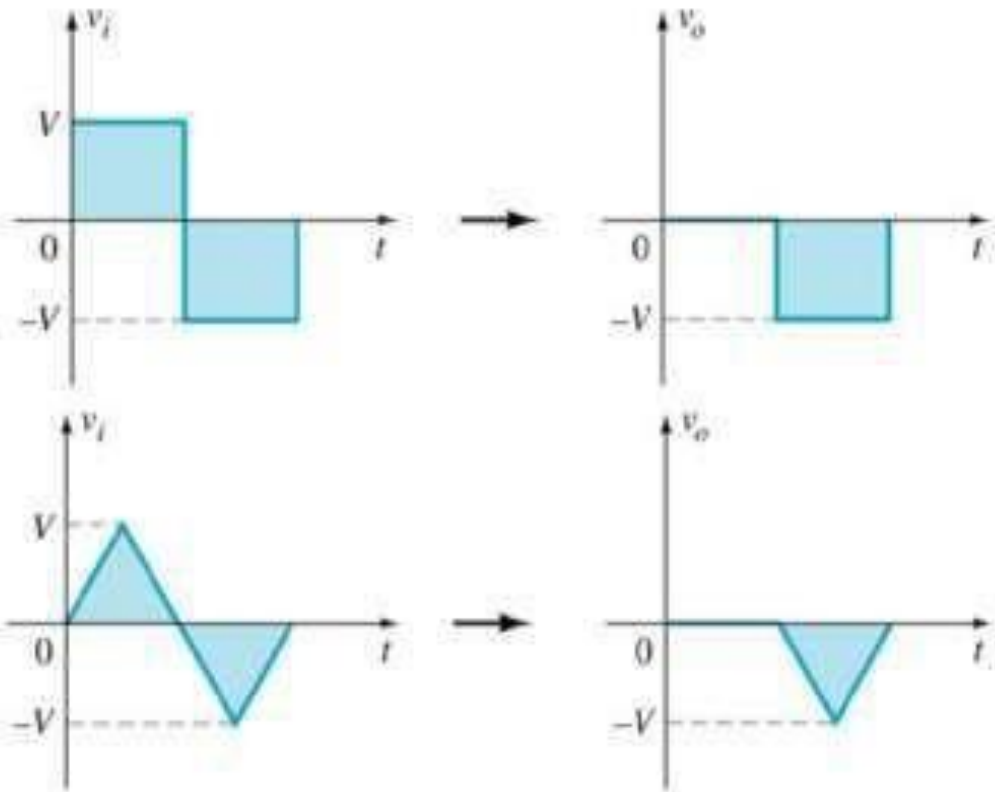

Summary of Clipper Circuits

Simple Parallel Clippers (Ideal Diodes)

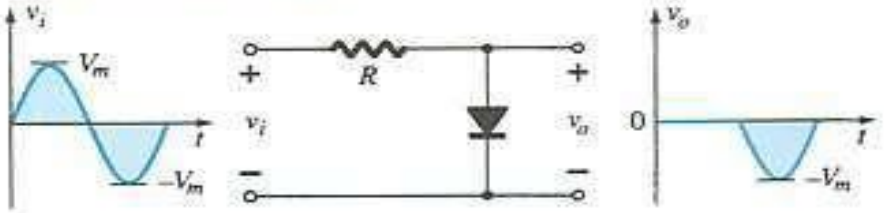

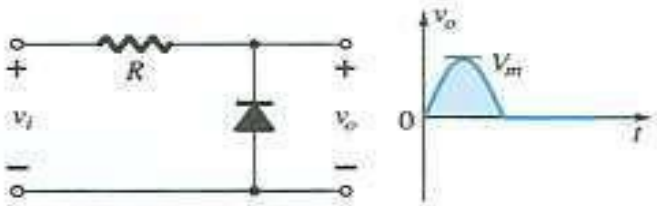

Biased Parallel Clippers (Ideal Diodes)

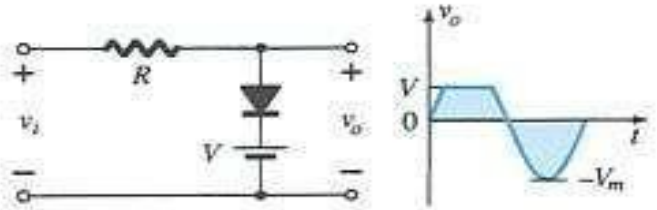

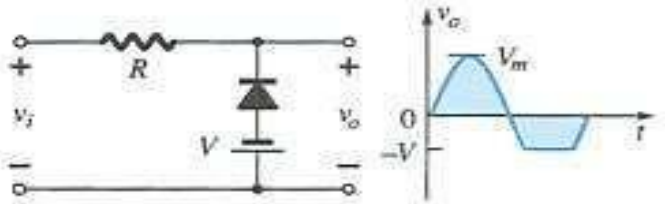

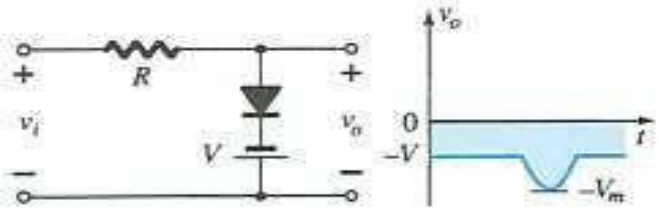

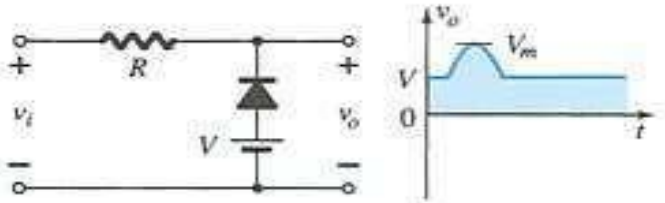

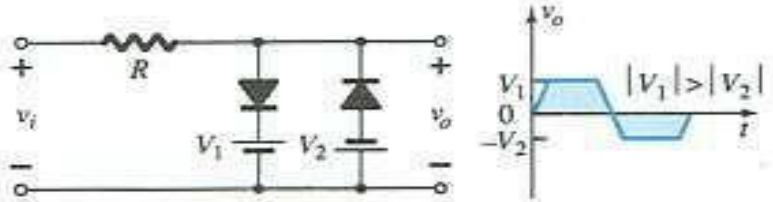

more…

Summary of Clipper Circuits

Simple Series Clippers (Ideal Diodes)

POSITIVE

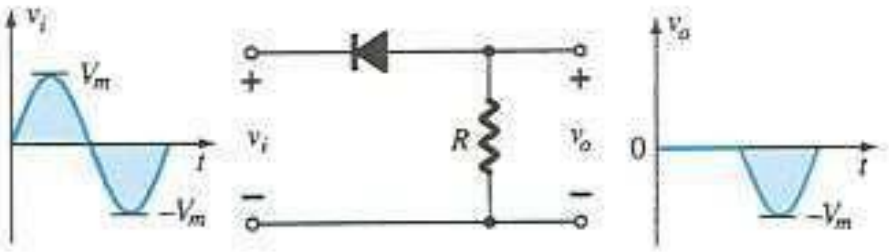

NEGATIVE

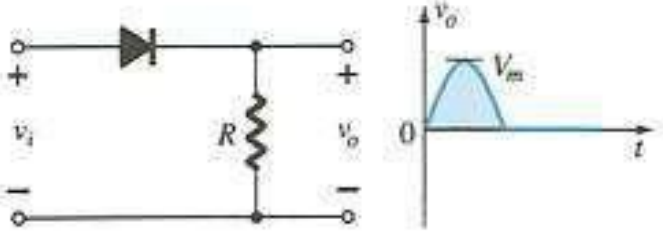

Biased Series Clippers (Ideal Diodes)

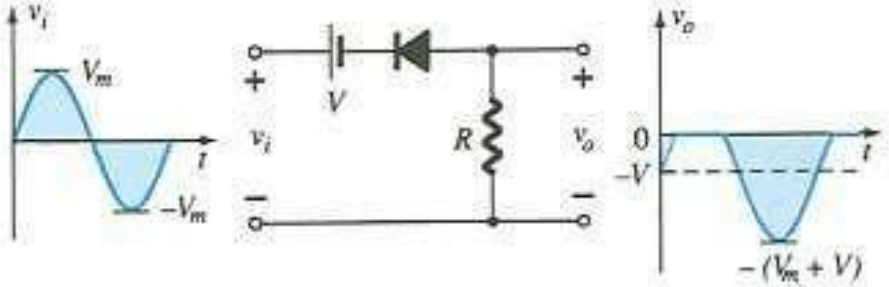

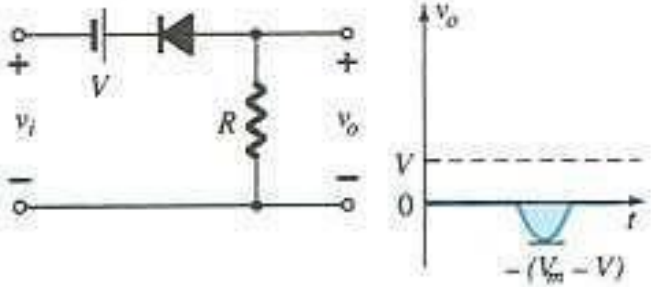

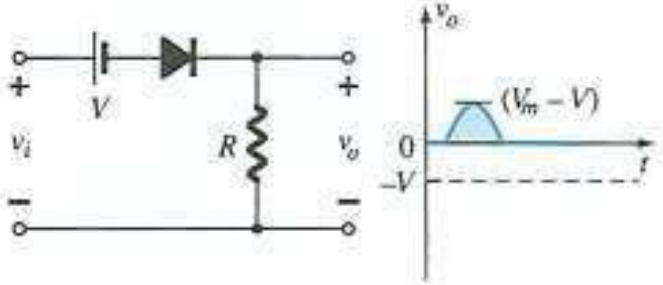

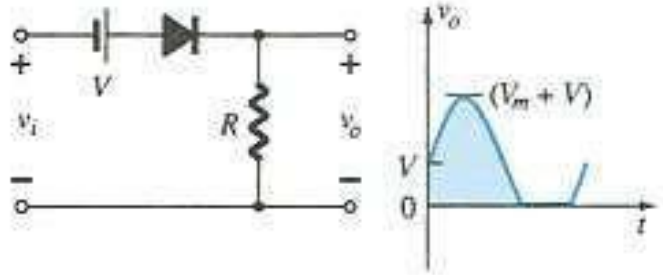

Drawbacks

- Series Diode Clipper

When diode is “OFF”, there should be no transmission of input signal to output. But in case of high frequency, signal transmission occurs through diode capacitance which is undesirable.

- Shunt Diode clippers

When diode is “OFF”, transmission of input signal to output should take place. But in case of high frequency input signals, diode capacitance affects the circuit operation and signal gets attenuated.

Clampers

A diode and capacitor can be combined to "clamp" an AC signal to a specific DC level.

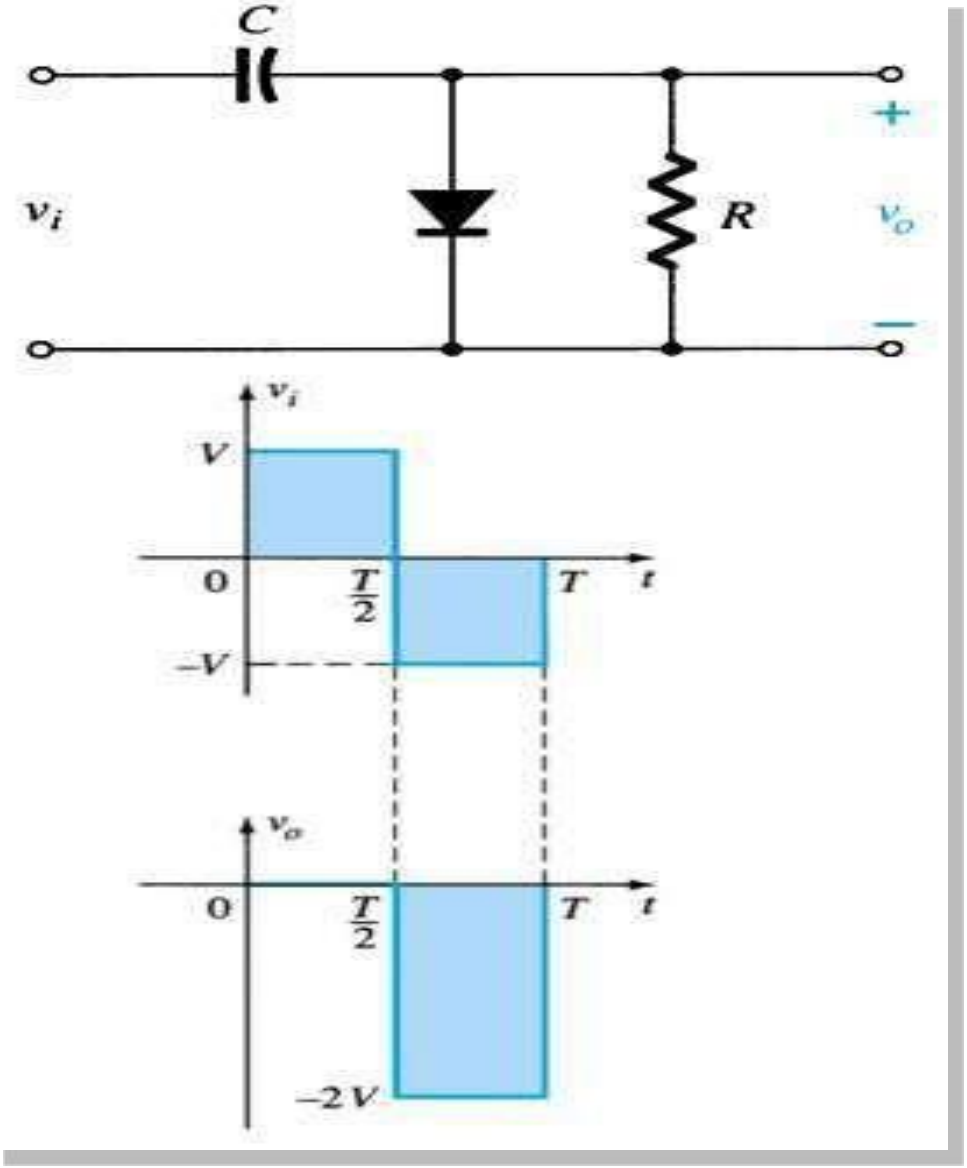

Note:

- Start the analysis of clamping network, by considering that part of the input signal that will forward bias the diode.
- During the period that the diode is in the “ON” state, assume that capacitor will charge up instantaneously to a voltage level determined by the network.
- Assume that during the perod when the diode is in “OFF” state, capacitor will hold on its established voltage level.
- Keep in mind the general rule, that

  Total swing of total output = Swing of input signal

Biased Clamper Circuits

The input signal can be any type of waveform such as sine, square, and triangle waves.

The DC source lets you adjust the DC clamping level.

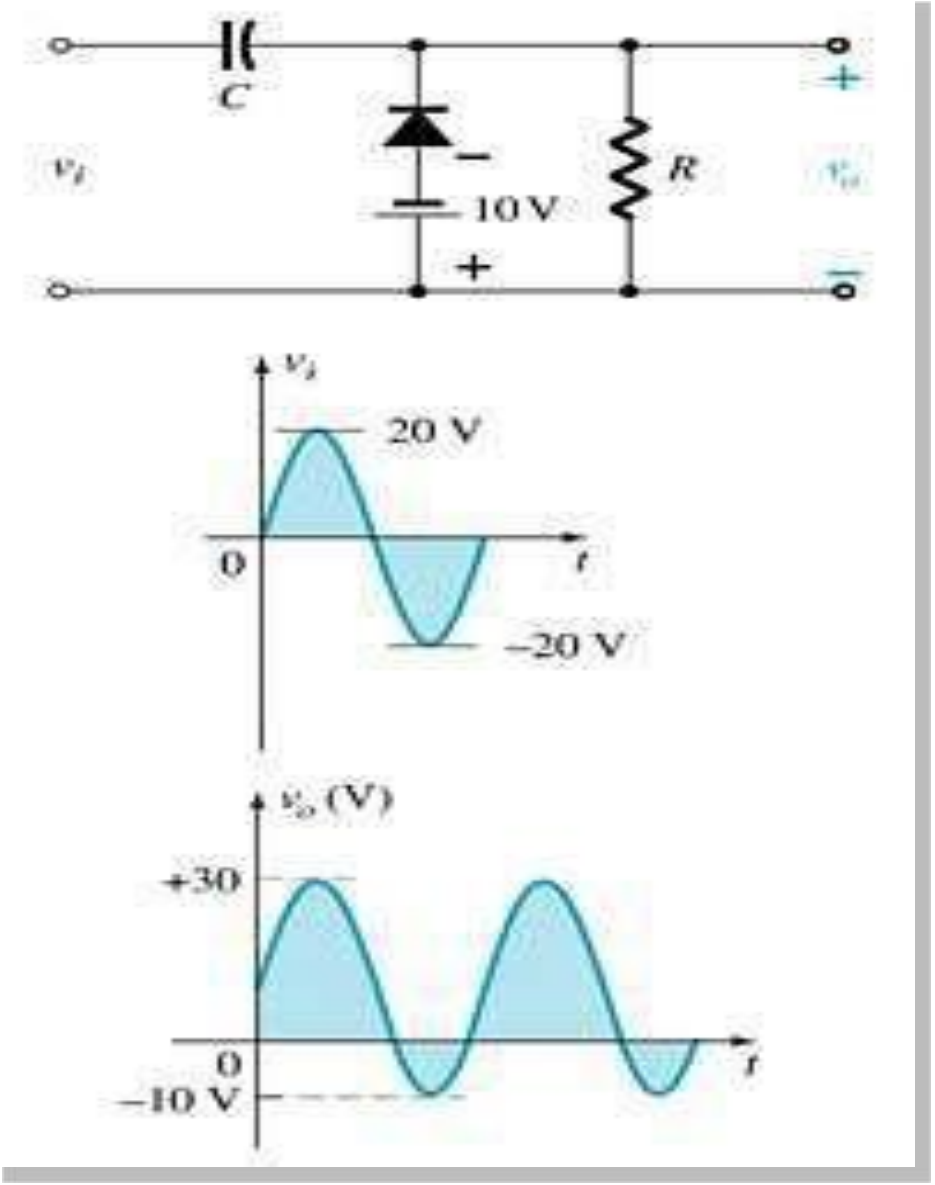

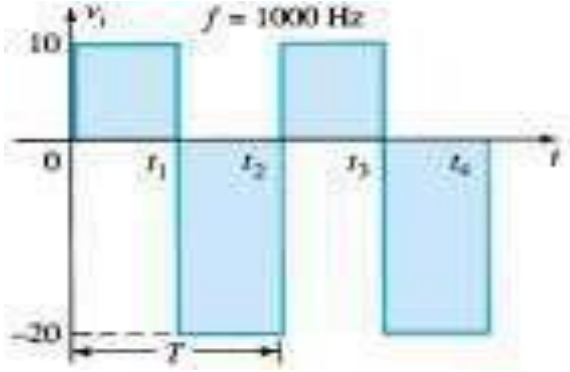

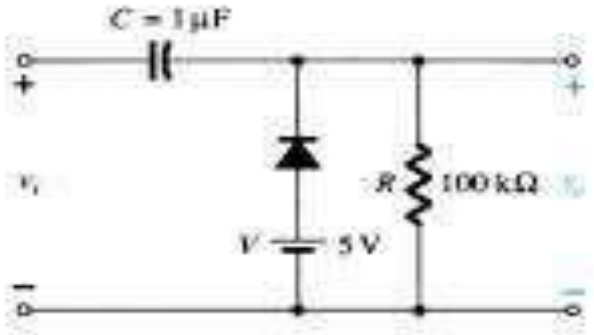

For t1-t2 cycle

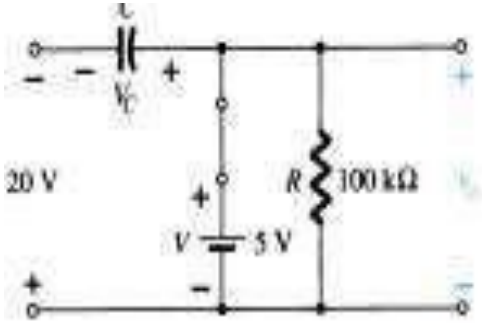

Summary of Clamper Circuits

Clamping Networks

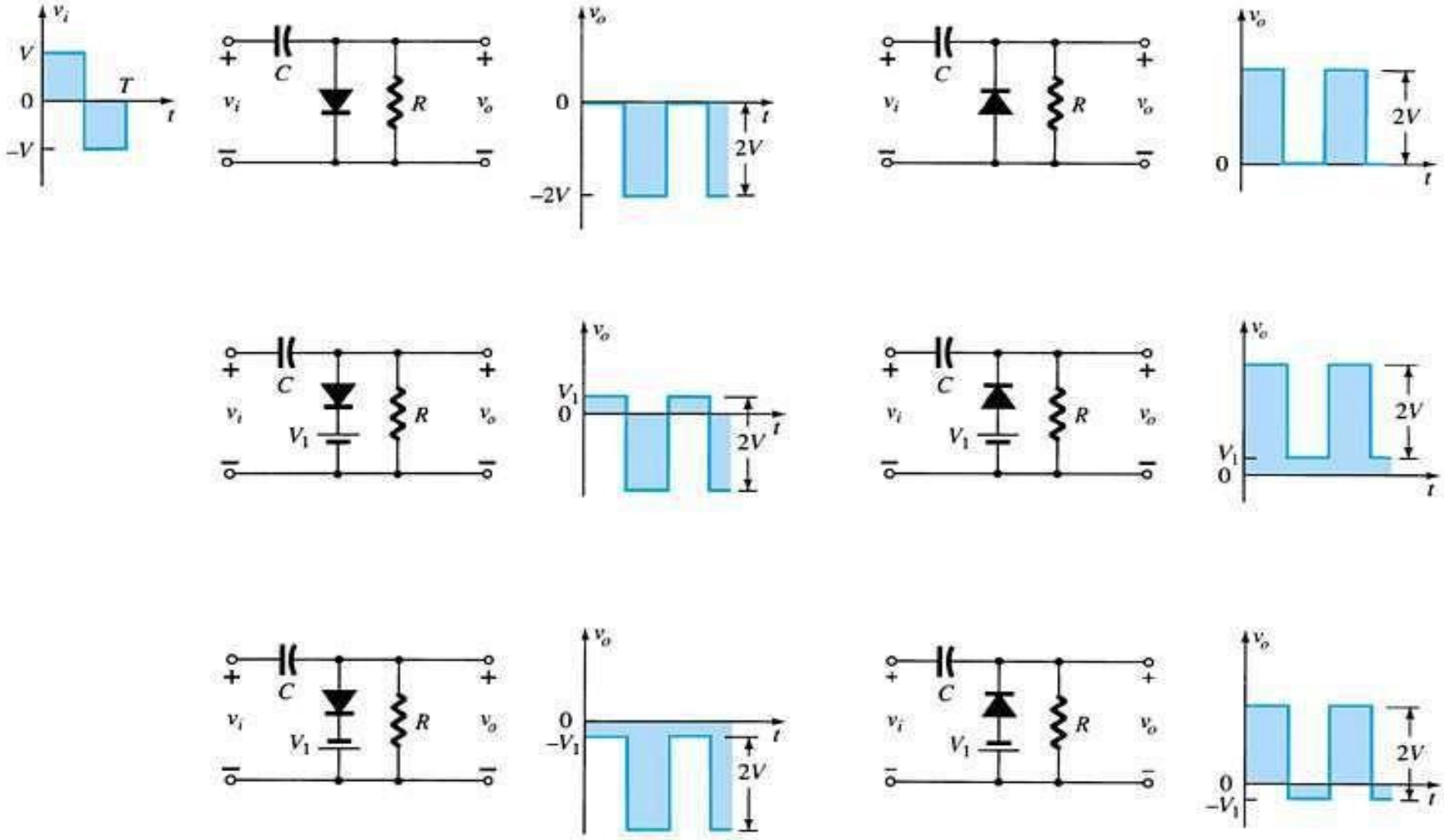

Power Supplies

Chapter- 06

UNINTERRUPTIBLE POWER SUPPLIES

- THIS PRESENTATION IS FOR INFORMATIONAL AND EDUCATIONAL PURPOSES ONLY. IT DOES NOT CONTAIN ALL INFORMATION REQUIRED, AND IS NOT INTENDED TO BE USED FOR THE SPECIFICATION OR DESIGN OF UNINTERRUPTIBLE POWER SUPPLIES (UPS) OR UPS SYSTEMS.

UNINTERRUPTIBLE POWER SUPPLIES
OUTLINE

- INTRODUCTION
- POWER DISTURBANCES
- UNINTERRUPTIBLE POWER SUPPLIES
- GENERAL DISCUSSION
- SUMMARY
- REFERENCES
- QUESTIONS

INTRODUCTION

- PURPOSE
- WHAT IS AN UNINTERRUPTIBLE POWER SUPPLY?
- WHY USE A UPS?

PURPOSE

- THE PURPOSE OF THIS PRESENTATION IS TO DISCUSS THE DIFFERENT TYPES OF UNINTERRUPTIBLE POWER SUPPLIES AVAILABLE, WHAT THE UPS PROTECTS AGAINST, THE COMPONENTS OF A UPS, AND ISSUES REGARDING SELECTION AND SIZING.

- THE DIFFERENT TYPES AND CAUSES OF POWER DISTURBANCES ARE DISCUSSED, AS WELL AS WHAT THE POWER UTILITY, THE ORIGINAL EQUIPMENT MANUFACTURER, AND YOU, CAN DO TO MINIMIZE THEIR EFFECT.

WHAT IS AN UNINTERRUPTIBLE POWER SUPPLY?

- AN UNINTERRUPTIBLE POWER SUPPLY (UPS) IS A DEVICE THAT HAS AN ALTERNATE SOURCE OF ENERGY THAT CAN PROVIDE POWER WHEN THE PRIMARY POWER SOURCE IS TEMPORARILY DISABLED

- THE SWITCHOVER TIME MUST BE SMALL ENOUGH TO NOT CAUSE A DISRUPTION IN THE OPERATION OF THE LOADS

WHY USE A UPS?

- PROTECTS AGAINST MULTIPLE TYPES OF POWER DISTURBANCES
- ONLY DEVICE THAT PROTECTS AGAINST AN OUTAGE
- OFFERS PROTECTION AGAINST
  - EQUIPMENT NOT OPERATING PROPERLY
  - COMPUTER AND EQUIPMENT DAMAGE
  - DATA LOSS
  - TIME AND EXPENSE TO RECOVER BACK TO WHERE YOU WERE, IF EVEN POSSIBLE

UPS

- ARCHITECTURES
- WAVEFORMS
- INVERTER TECHNOLOGY
- COMPONENTS
- SWITCHOVER TIME
- ADVANTAGES / DIS-ADVANTAGES
- SIZING
- BATTERY SAFETY

UPS ARCHITECTURES

- LINE INTERACTIVE
- ON-LINE

BLOCK DIAGRAM
LINE INTERACTIVE UPS

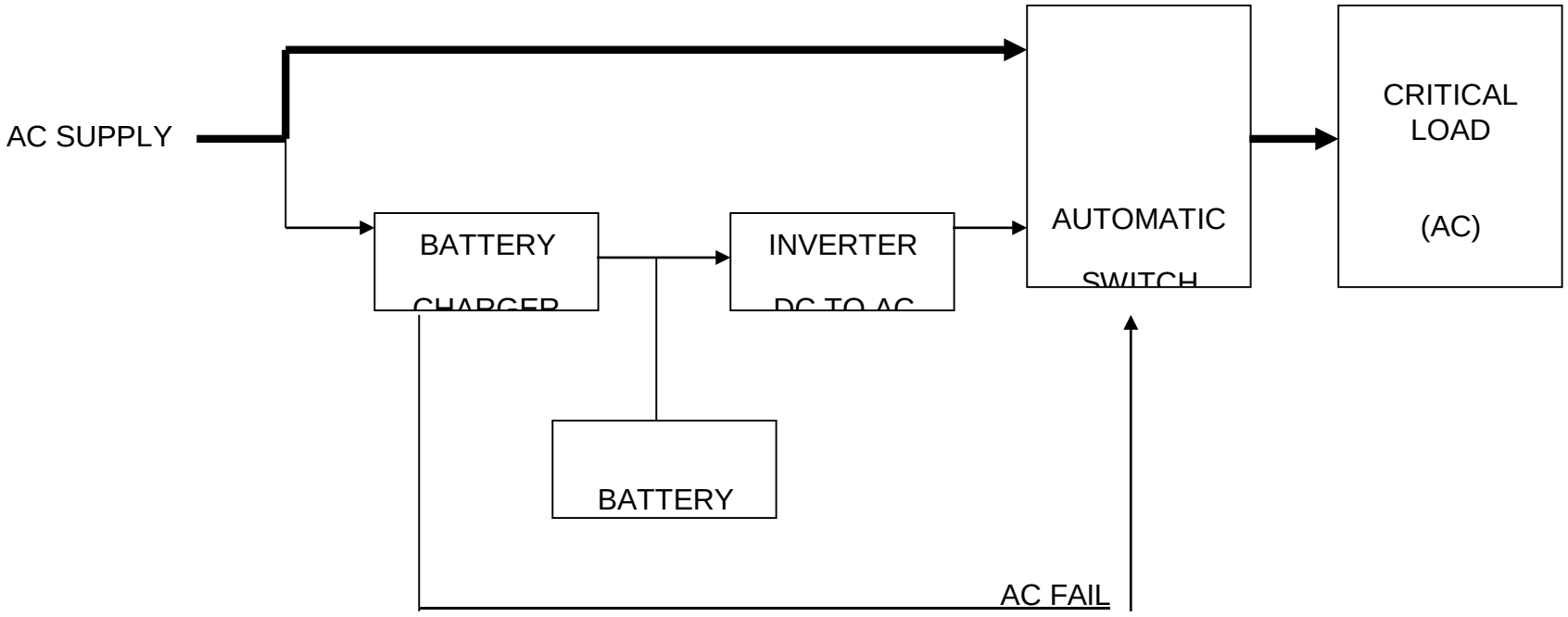

BLOCK DIAGRAM
ON-LINE UPS

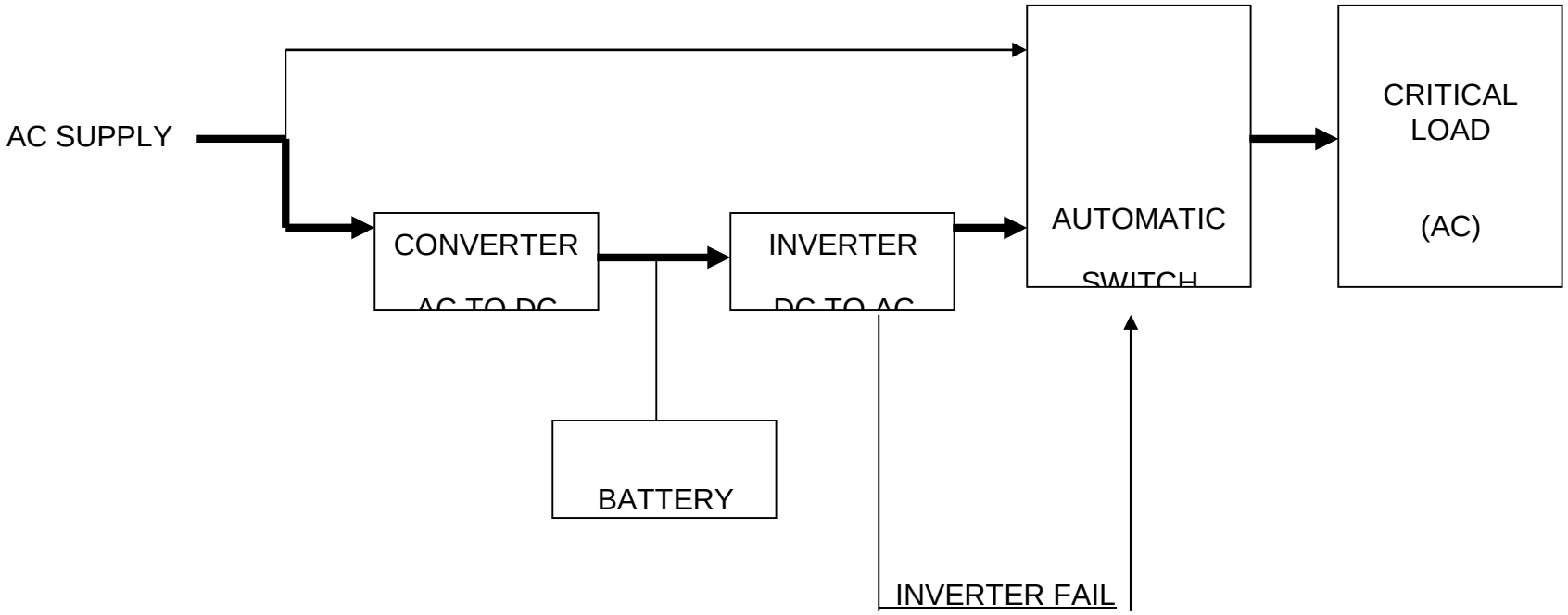

Operational Amplifiers

Chapter- 07

What is an Op-Amp

- Low cost integrating circuit consisting of:
  - Transistors
  - Resistors
  - Capacitors
- Able to amplify a signal due to an external power supply
- Name derives from its use to perform operations on a signal.

Applications of Op-Amps

- Simple Amplifiers
- Summers
- Comparators
- Integrators
- Differentiators
- Active Filters
- Analog to Digital Converters

Symbol for an Op-Amp

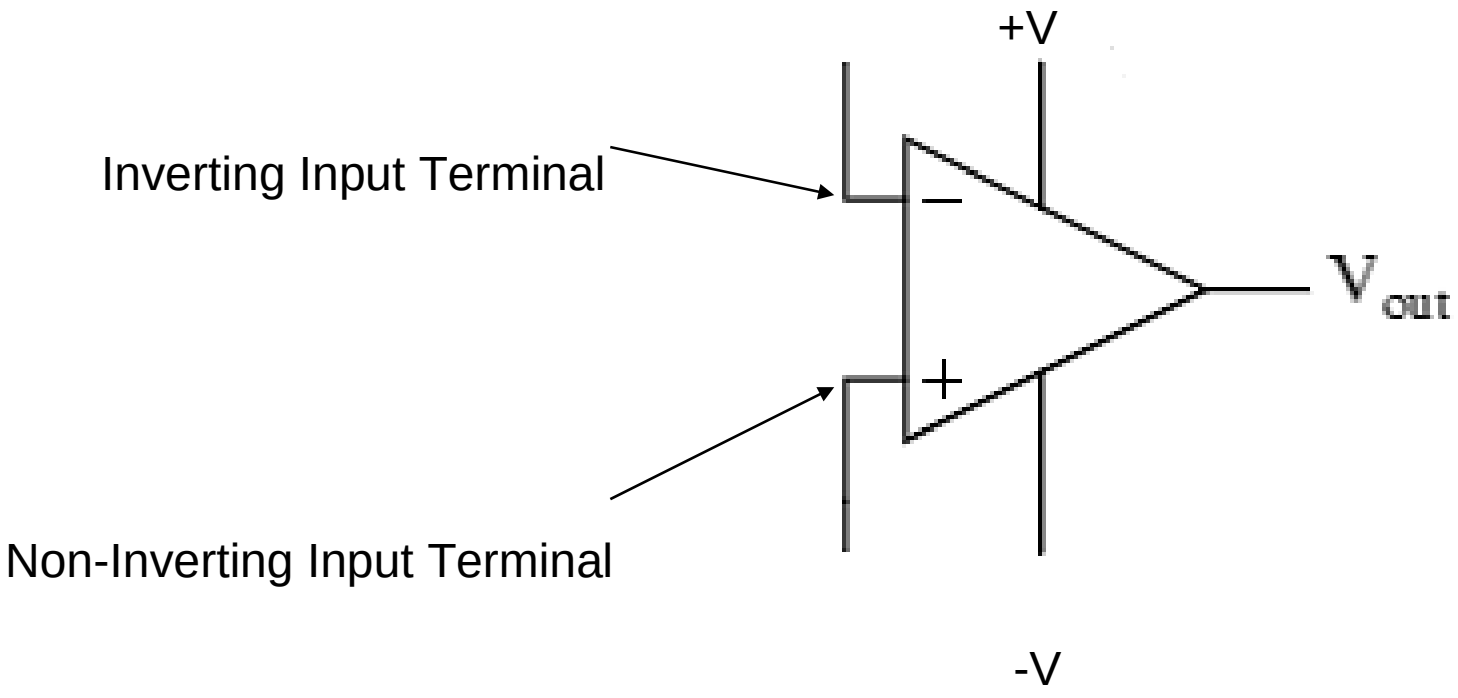

IC Circuit

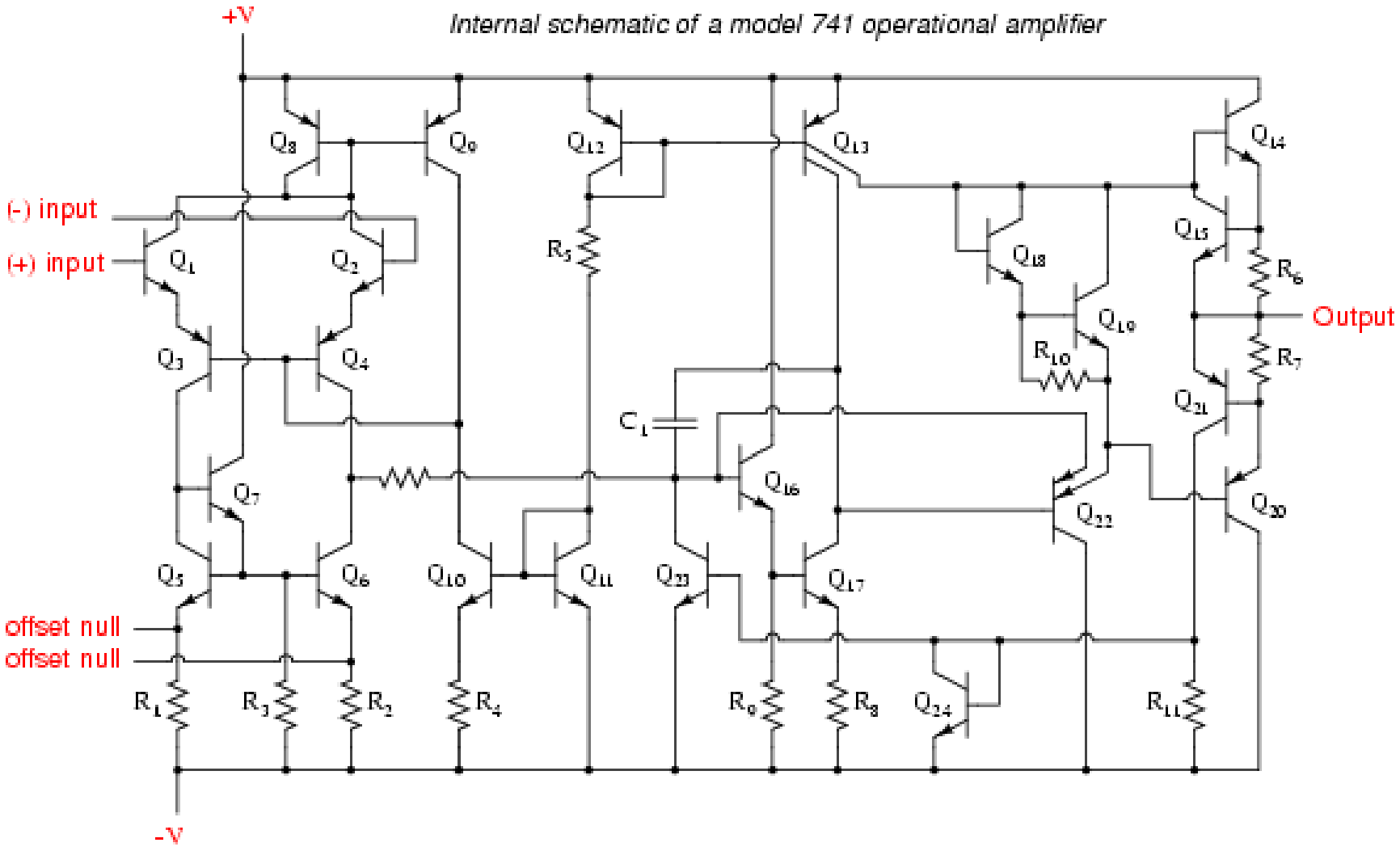
Internal schematic of a model 741 operational amplifier
+V
(-) input
(+) input
offset null
offset null
-V
Output
Q1
Q2
Q3
Q4
Q5
Q6
Q7
Q8
Q9
Q10
Q11
Q12
Q13
Q14
Q15
Q16
Q17
Q18
Q19
Q20
Q21
Q22
Q23
Q24
R1
R2
R3
R4
R5
R6
R7
R8
R9
R10
R11
C1

What do they really look like?

Typical 8-pin "DIP" op-amp integrated circuit

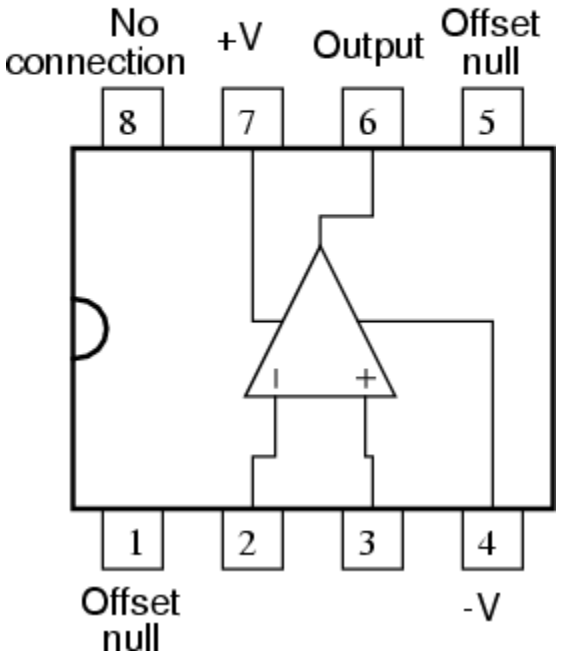

Dual op-amp in 8-pin DIP

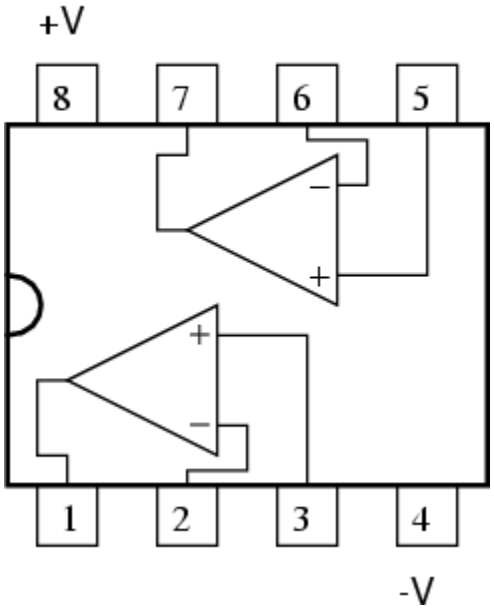

Ideal Op-Amps

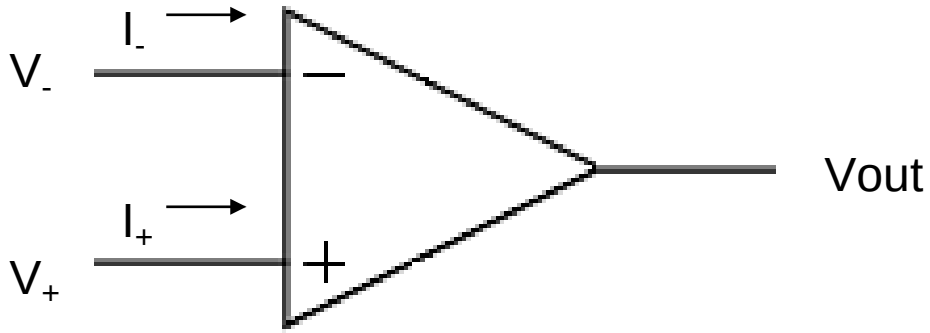

- Infinite input impedance
  - $I_+ = I_- = 0$
- Infinite gain
  - $V_+ = V_-$
- Zero output impedance

– Output voltage is independent of output current

Inverting Amplifier

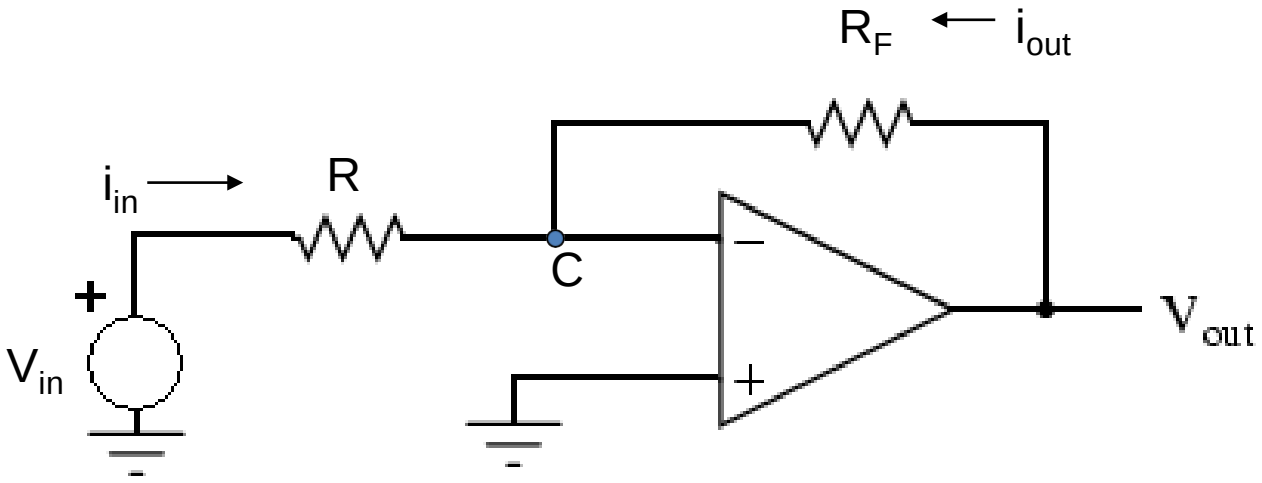

$$\frac{V_{out}}{V_{in}} = -\frac{R_F}{R}$$

Non-Inverting Amplifier

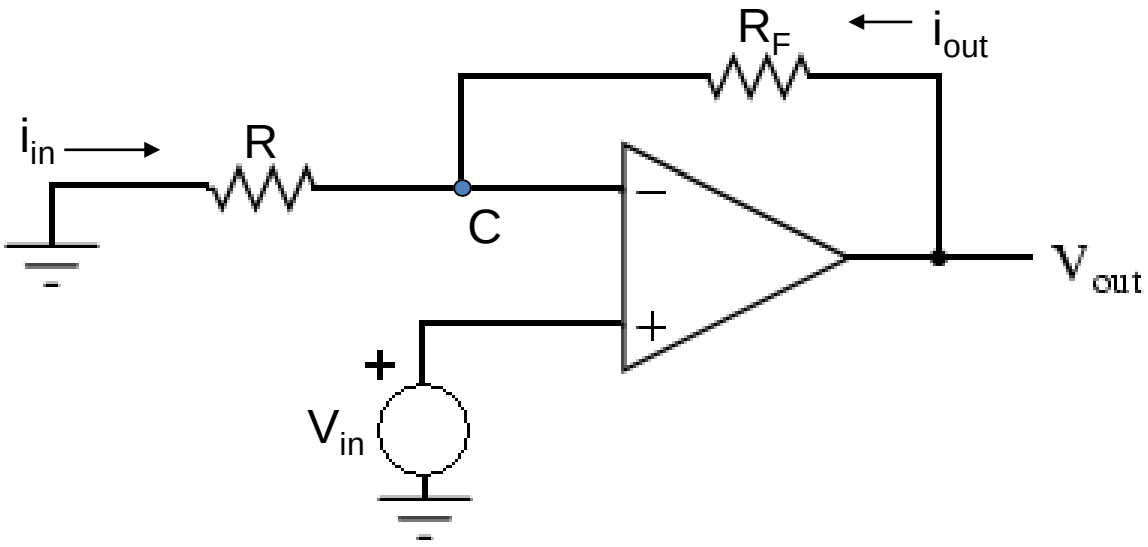

$$\frac{V_{out}}{V_{in}} = 1 + \frac{R_F}{R}$$

Difference Circuit

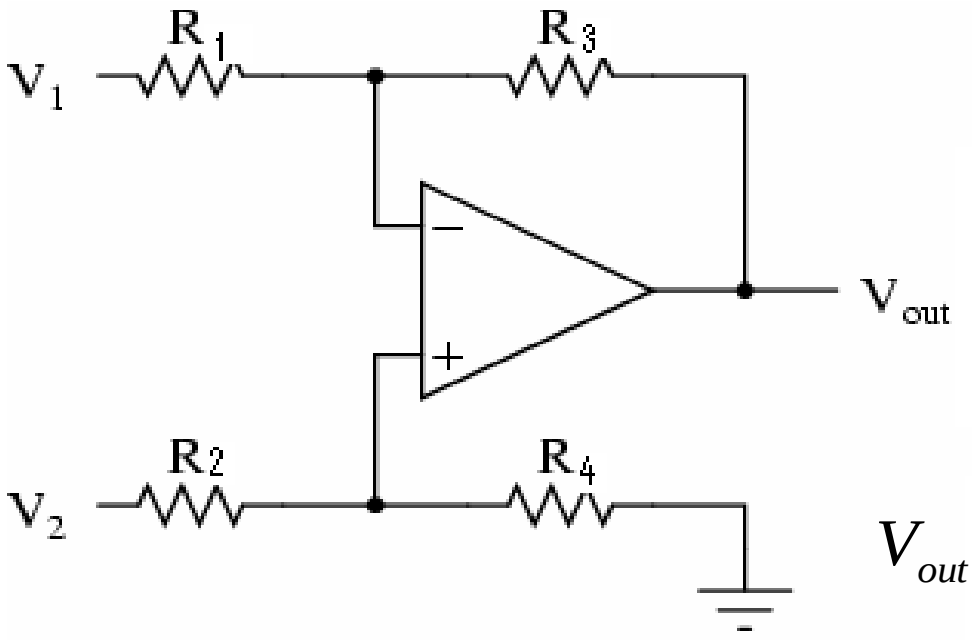

- Used to subtract analog signals
- Output signal is proportional to difference between two inputs

$$V_{out} = \frac{V_2(R_3 + R_1)R_4}{(R_4 + R_2)R_1} - \frac{V_1 R_3}{R_1}$$

If all resistors are equal: $V_{out} = V_2 - V_1$

Integrating Circuit

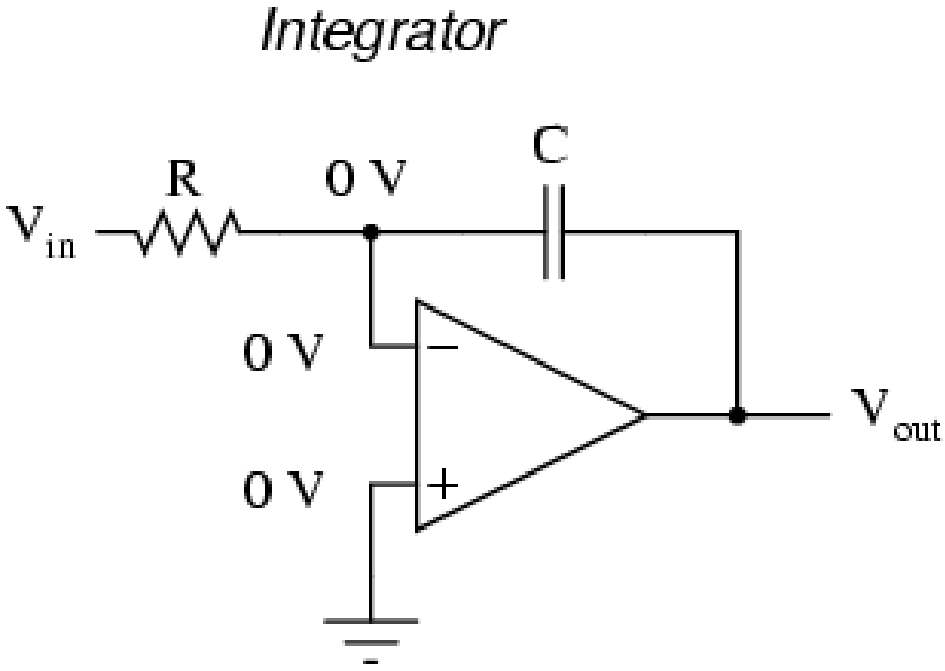

- Replace feedback resistor of inverting op-amp with capacitor
- A constant input signal generates a certain rate of change in output voltage
- Smoothes signals over time

$$\frac{dv_{out}}{dt} = -\frac{V_{in}}{RC}$$

or

$$V_{out} = \int_0^t -\frac{V_{in}}{RC}\,dt + c$$

Where,

c = Output voltage at start time (t=0)

Differentiating Circuit

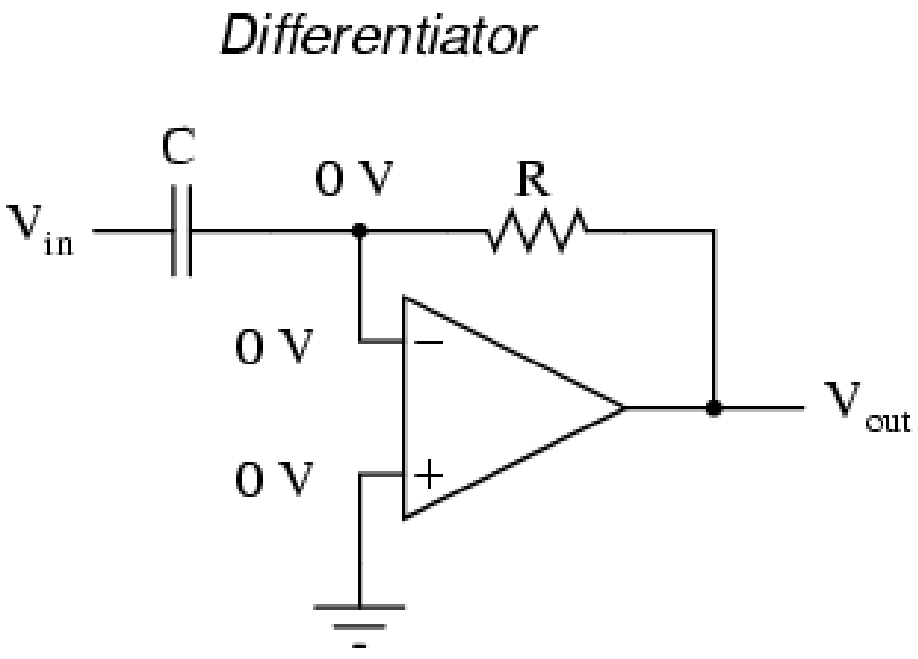

- Input resistor of inverting op-amp is replaced with a capacitor
- Signal processing method which accentuates noise over time
- Output signal is scaled derivative of input signal

$$V_{out} = -RC \frac{dv_{in}}{dt}$$

Real Vs Ideal Op Amp

Parameters	Ideal	Typical
Input Impedance	∞	$10^6\Omega$
Output Impedance	0Ω	100-1000Ω
Voltage Gain	∞	10^5 - 10^9
Common Mode voltage	0	10^{-5}

Important Parameters for Op-Amps

- Input Parameters
  - Voltage (Vicm)
  - Offset voltage
  - Bias current
  - Input Impedance
- Output Parameters
  - Short circuit current
  - Voltage Swing
  - Open Loop Gain
  - Slew Rate

The 555 Timer IC - 1

- The 555 timer IC
  - is an integrated circuit.
  - Can function as monostable or astable circuit (requires the addition of external resistors and capacitors).
  - Two main types available:
    - bipolar
    - CMOS.
  - Advantages for their use:
    - they have a high output current, allowing relatively large loads to be driven directly.
    - Ability to produce accurate and repeatable time periods.

The 555 Timer IC - 2

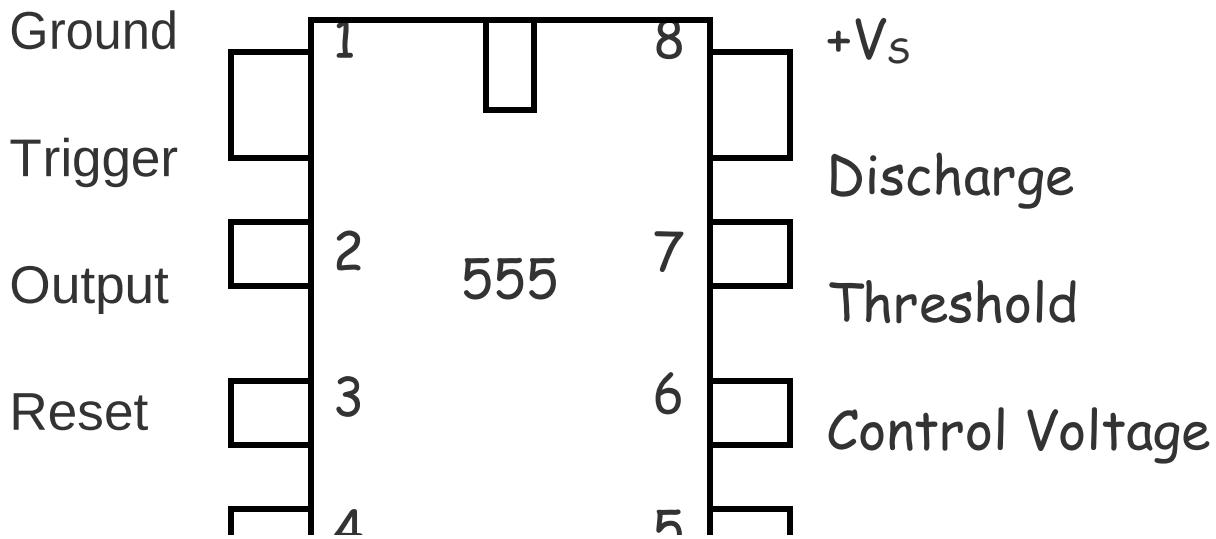

Pin diagram for the 555 timer IC

- Both ICs operate from a wide voltage range (4.5-15.5V for bipolar, 2-15V for CMOS).
- CMOS require less current to operate than the bipolar but are more expensive to purchase.

The 555 Monostable Timer IC - 1

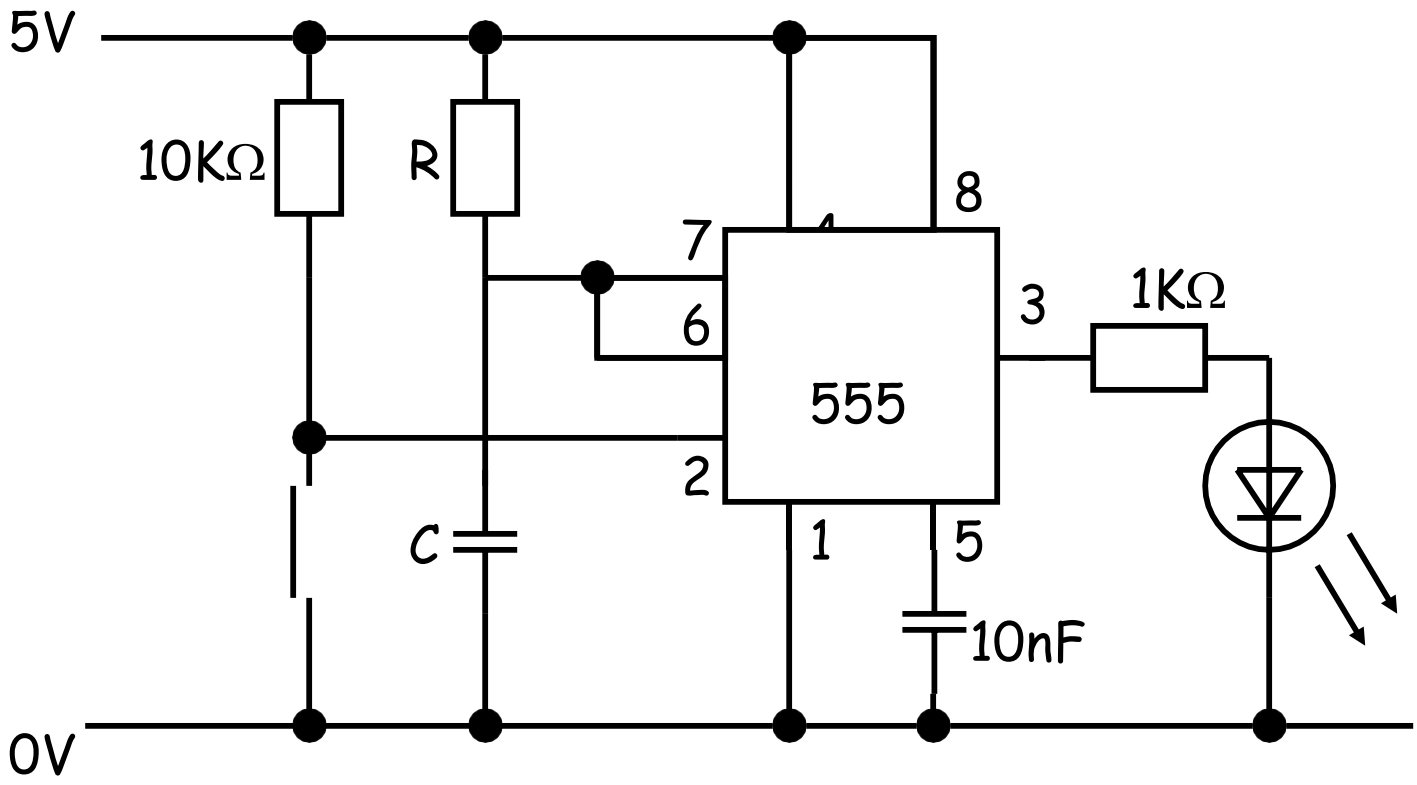

The 555 monostable

Summary

- A monostable produces a single pulse for a time determined by an RC network.
- Logic gate monostable period = 0.7CR
- 555 monostable period = 1.1CR

- An astable produces a continuous pulse; the frequency is determined by an RC network.

Electrical and Electronics Engineering Materials

- For Electrical Engineering 3rd sem

Contents

- Classification of materials
- Conducting materials
- Semi-conducting materials
- Insulating materials
- Magnetic materials
- Special purpose material
- Material for electrical machines

Chapter 1

Classification of material

The material are classified into following types-

1. *Conducting material –The material in which electric current flow easily . Example : copper , brass etc.*
2. *Insulating material- The material in which electric current canno flow .Example : wood glass .*
3. *Semiconducting material – The material whose property lie between insulating and conducting material. Example : silico ,gallium .*

Classification of material on the basis of atomic theory

- conducting material .
- insulating material .
- semiconducting material .

Conducting material

The material whose outermost orbit is incomplete . Example copper

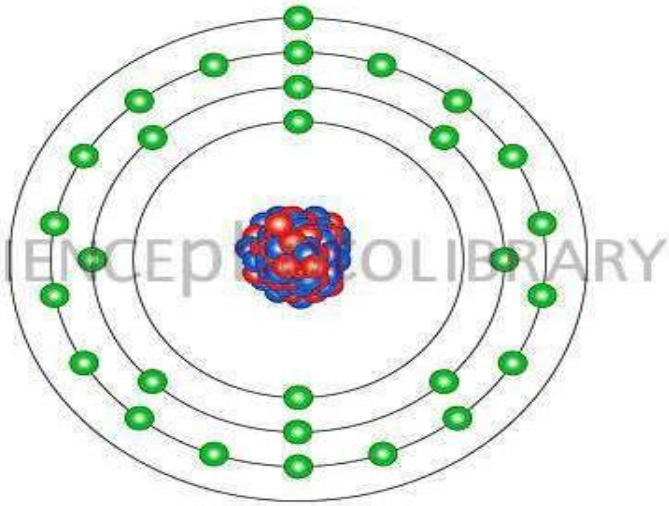

Insulating material

The material whose outermost orbit is incomplete .

Semiconducting material

The material whose property is lies between insulating and conducting material ,.

Energy band theory

- The range of energies possessed by the electrons of the same orbit of different atoms in a solid is known as energy band
- Types of energy bands.
- Valence band
- Conduction band
- Forbidden energy band

Classification of materials on the basis of energy band

- Insulators- insulators are those materials in which we cannot pass the electric current easily

- Semi conductors- semiconductors are those materials whose resistivity lies between conductors and insulators . In semi conductor, valence band is full of electrons while conduction band is empty. But in this, energy gap Is very small.

- Conductor- conductors are those materials which offers least resistance to electric current. Conduction band is overlapped with valence band. So large no. of electrons jump valence band to conduction band.

- Chapter 2

CONDUCTING MATERIAL

Conductor – conductor are those material which permit the flow of energy .

ELECTRICAL PROPERTY –

1. **resistivity must be low .**
2. **conductivity must be good .**
3. **temp. co-efficient of resistance must be low .**

MEC HANICAL PROPERTY

1. **Resistance to corrosion .**
2. **Ductility.**
3. **It should withstand stress and strain .**

ECONOMICAL FACTOR

1. **LOW IN COST .**
2. **Easy available.**
3. **Easy to manufacture .**

RESISTANCE

The property of material by which it oppese the flow of electric current through it is called resistance .

RESISTANCE DEPEND UPON VARIOUS FACTOR

1. it directly proportional to length of conductor.
2. It inversely proportionl to area of conductor.
3. It depend upon the nature of material .
4. It depend upon temp.

$$R=p\ l\backslash A$$

The unit of resistance is OHM .

SPECIFIC RESISTANCE OR RESISTIVITY

The resistance offered by 1 meter length of conductor of the material having an area of one square meter .

R=p L\A

L =1m ,

A = 1m square

p=find

p=RA\L= ohm * 1\1= ohm meter

THE unit of specific resistance is ohm meter .

FACTOR EFFECTING RESISTIVITY

- Temperature
- Alloying
- Mechanical stressing

EFFECT OF TEMPERATURE –

Resistivity of material depend upon temp. changes . The resistance of all pure metal increase with increase in temp.

EFFECT OF ALLOYING

Alloying is a process of adding of impurities in the metals and non metals in small amount .

By alloying we can change alloying and mechanical strength of conductor .

EFFECT OF MECHANICAL STREESING

When material is subjected to mechanical stresses its resistivity changes due to mechanical distortion on crystal structure of material . The main limitation of mechanical stressing is reduction in the conductivity of material .

SUPERCONDUCTOR

Superconductor are those material which shows zero resistance at a particular temp. The temp. at which this occurs is called super conducting transition temperature .

Transition temp. of few metal is given below –

s.no.	metal	Transition temp.
1	Aluminium	1.14 (k)
2	cadnium	0.6
3	mercury	4.16
4	lead	7.26
5	zinc	0.78

6	Copper sulphite	1.6

APPLICATION OF SUPER CONDUCTOR

- Electrical machines
- Transmission and distribution line
- Electromagnet
- computers

Classification of Conducting material

- Low resistivity material
- High resistivity material

LOW RESITIVITY MATERIAL

1. low resistance temp. coefficient
2. sufficient mechanical
3. Ductility
4. resistance to corrosion
5. Density

APPLICATON OF LOW RESITIVITY MATERIL

It is used in house wiring , as conductor for transmission and distribution , motor and transformer .

HIGH RESITIVITY MATERIAL

1. High resistivity
2. low temp. co-efficient
3. High melting point
4. high ductile
5. corrosion resistance
6. high mechanical strength

APPLICATION –

These are used for making heating element, electric bulb , electric iron etc.

PROPERTIES AND APPLICATION OF LOW RESISTIVITY MATERIAL

- SILVER (At no . 47 , At Wt . 107) – silver is at top in all conductor material . It is high electrical conductivity & corrosion resistance .

PROPERTY –

1. It is high ductile & malleable .
2. It has highest electrical and thermal conductivity .
3. Its melting point 960 C .
4. Its density is 10.5 g /cc.
5. Low surface contact resistance .

APPLICATION –

it is used to making contact of relay , thermal overload devices .

GOLD

Gold is at second position .

PROPERTIES –

1. It is high ductile and malleable .
2. It offers high resistance of corrosion.
3. Its melting point is 1063 C.
4. Its boiling point is 2970 C .

APPLICATION –

It is used for making contacts of highly sensitivity devices .Due to its high cost its use is limited .

COPPER

Copper is a highly used conducting material because of its low cost .

PROPERTIES –

1. It is radish in color .
2. It is ductile and malleable in nature .
3. It is low contact resistance .
4. Its melting point is 1083 C .
5. Its boiling point is 2320 C .
6. Its density is 8.9 g /cc .
7. Its tensile strength is 8.15 tones/cm square .

APPLICATION –

It is used for making electrical wires , cables , winding of transformer and machine .

TYPES OF COPPER

- Hard drawn copper
- Annealed copper

DIFFERENCE BETWEEN HARD DRAWN COPPER AND ANNEALED COPPER

Hard drawn copper	Annealed copper
1. It is made by drawing copper into conductor in cold condition .	1. It is made by increasing temp. of hard drawn copper to a specific value then cool at room temp.
2. It is very hard	2. It is comparatively soft .
3. Its tensile strength is 8.15 tones/cm square	3. Its tensile strength is 4.5 tones/cm square .
4. It is less flexible .	4. It is more flexible .
5. It is used for making commutator segments .	5. It is used for making winding in transformer .

ALUMINIUM

It is widely available in India & most commonly used material Its conductivity is next to copper .

PROPERTIES –

1. It is silver white color .
2. It is ductile and malleable .
3. It offer high resistance to corrosion .
4. Its specific gravity is 2.7 .
5. Its melting point is 655 C .
6. Its boiling point is 1800 C .
7. It is softer then copper .

APPLICATION –

It is used in flexible electric wires , overhead transmission , electronics kit , household items .

TANTALUM

It is a rare hard metal which is blue grey in appearance .

PROPERTY –

1. Its melting point is 3290 K.
2. Its boiling point is 5731 K.
3. It is high mechanical strength .

APPLICATION –

Its major used as metal powder , in production of electronic component , It is used as thermo wells.

LOW RESITIVITY COPPER ALLOYS

- BRASS – it is an alloy of copper and zinc containing 60% of copper and 40% zinc.
- PROPERTIES –

1. It is high tensile strength .
2. It is lower conductivity than copper .
3. It can attain any shape if pressed .
4. It can be easily drawn into wires .
5. Its melting point is about 890 C .
6. Its specific gravity is 3.3 .

APPLICATION –

It is used as a current carrying material on plug point , socket outlets , switches , lamp holders .

BRONZE

Its color is radish yellow in color and it is alloy of copper and tin . It contain 84% copper and 8 to 16% OF tin.

PROPERTIES –

1. It is found in two types i.e. cadmium bronze and silicon bronze.
2. It has good conductivity but less than copper
3. It is free from corrosion .

APPLICATION –

It is used for conducting commutator or segments .

PLATINUM

Platinum is among the most stable metals with high resistivity

.

PROPERTIES –

1. It is a grayish white metals .
2. It is malleable and ductile .
3. Its melting point is 1775 C .
4. Its specific gravity is 21.4 g/cc .
5. It is high tensile strength .

APPLICATION –

1. it is used as heating element in ovens .
2. it is used in thermocouple .
3. It is used as grid for vacuum tubes .

MERCURY

Mercury is silvery white metal .

PROPERTIES –

1. Its specific gravity is 13.55 g/cc .
2. It remain in liquid state at room temperature
3. Its boiling point is 358 C .
4. it is highly poisonous metal .
5. It is heavy white silver metal .
6. oxidation takes place beyond 300 C in contact with air .

APPLICATION –

It is used in thermometers , fluorescent tubes , mercury arc rectifier .

LEAD

It is bluish gray colored metal .

PROPERTIES –

1. It is a hard and soft metal with high specific gravity .
2. It is high malleable .
3. Lead is corrosion resistant metal .

APPLICATION –

It is used in lead acid battery , soldering wires , cable sheathes , protective glass in computers .

ALLOYS OF HIGH RESISTIVITY CONDUCTING MATERIAL

NICHROME – As the name indicates it is an alloy of Nickel and chromium . It contains 70 to 80 % nickel and 20 to 25 % chromium & about 3% of manganese 2% iron .

PROPERTY –

1. Its melting point is 1350 C .
2. Its specific gravity is 8.24g/cc.
3. It is high ductile alloy i.e. drawn into thin wires .
4. It offers high resistance to oxidation .
5. It is silvery white in appearance .

APPLICATION –

It is used as heating element in soldering irons ,tubular heaters .

MANGANIN

It is a copper alloy containing about 85% copper ,13% manganese and 2% nickel .

PROPERTIES –

1. Its melting point is 1025 C .
2. Its specific gravity is 8.2.
3. It temp. co-cfficient of resistance is low .
4. It is a ductile alloy and can be drawn into wires .
5. It offers high resistance to oxidation .

APPLICATION –

It is used in making standard resistance because of very low temp. co-efficient of resistance .,making coils ,shunt of measuring instrument , in electric heating element .

CONSTANTAN

- It is an alloy of copper containing about 60% of copper and rest 40% nickel .

PROPERTIES –

1. It is shiny allow having white silver like appearance .
2. Its specific gravity about 8.92 g/cc.
3. Its melting point is 1300 C .
4. It is highly corrosion resistant .
5. Its working temp. around 500 C .

APPLICATION –

It is used for making different type of rheostats, resistance wires , resistance boxes , thermocouples ,arc lamps .

TIN – LEAD ALLOY

Tin lead alloy as the name indicates is an alloys of tin and lead containing 60% tin & 40% lead .

PROPERTIES –

1. its melting point is 188 C .however its melting point also depend upon the composition ratio of two materials . Pure lead melts at 327 C and pure tin at 232 C .
2. The alloy is not very strong but addition of antinomy to it increases its strength .
3. It is corrosion resistant material .
4. It is shiny appearance .

APPLICATION –

it is widely used in electronics and electrical industries as soldering material .

Beryllium copper

It is an alloy of copper and beryllium having 97% copper and 3% beryllium.

PROPERTIES –

1. It is modulus of elasticity depend upon the extent of the heat treatment of alloy .
2. It is highly resistant to corrosion .
3. It electrical resistivity changes with heat treatment .
4. It is weld able , machinable .

APPLICATION –

It is used in making co-axial connector coil springs , in electrical equipment like switches relay blades control bearings ,electronic connector switches .

BUNDLE CONDUCTOR

It is a conductor made up of two or more sub conductor per phase in close proximity and is used as one phase conductor . For voltage more than 220KV ,it is preferable to use more than one conductor per phase which i9s known as bundle conductor .

PROPERTY –

1. Reduce corona loss .
2. Reduce reactance .
3. Reduce surge impedance .
4. It reduce radio interference .

APPLICATION-

It is used for transmission purpose as it helps in obtaining better voltage regulation and efficiency by reducing the inductance and skin effect present in the power lines .

- Chapter 3

SEMICONDUCTING MATERIAL

Semi conducting material –

these are the material which posses the conductivity higher then insulator and less than conductor . These are used for manufacture of active component in electronics industries .

Crystal structure of semiconductor

- To understand the phenomenon of conduction in semiconductor ,one should understand the crystalline structure of it . In crystal structure the atoms are bonded together in a cohesive bond .The semiconductor has 4 electron in there outer most orbit . To fill the outermost orbit , each atom requires four more electron by sharing one electron each from the four adjacent atoms and hence form a crystal .

COVALENT BOND

The type of bonding in which bonds are formed by sharing the valance electrons are called covalent bond .

THERMAL GENERATION

When an electron moves away to the conduction band , a vacancy is created in thew valance band this is called hole. Whenever a free electron is generated ,a hole is created simultaneously. This type of generation is called thermal generation .

TYPE OF SEMICONDUCTOR

- Intrinsic .
- Extrinsic .

INTRINSIC SEMICONDUCTOR –

These semiconductor are in the purest form i.e. an extremely pure semiconductor is called intrinsic semiconductor .

EXTRINSIC SEMICONDUCTOR –

A doped semiconductor is called extrinsic semiconductor .

DIFFERENCE BETWEEN N-type and P-type SEMICONDUCTOR

N-type semiconductor	P-type semiconductor
1. It is an extrinsic semiconductor obtained by doping of pentavalent impurity.	1. It is an extrinsic semiconductor obtained by doping of trivalent impurity.
2. Impurity atoms added provided extra electrons in the structure and are called donor atom.	2. Impurity atom added provide extra holes in the structure and are called acceptor atom .
3. Electrons are majority carriers .	3. Holes are majority carriers .
4. Holes are minority carriers .	4. Electrons are minority carriers .
5. Electron density is mare than hole density .	5. Hole density is more than electrons density .

DIFFERENCE BETWEEN INTRINSIC AND EXTRINSIC SEMICONDUCTOR

INTRINSIC semiconductor	EXTRINSIC semiconductor
These materials do no contain any impurities .	These materials contain added impurities
Conduction take place by thermally or optically excited electrons .	Conduction take place by the movement of free electron .
Conductivity takes place at higher temp.	Conductivity takes place at normal temp.
Conductivity increase with increase in temp.	Conductivity does not depend upon temp.

SEMICONDUCTOR DEVICE

- DIODE – A semiconductor diode is a device made of P- type and N- type semiconductor.
- TRANSISTOR – It is formed by two P-N junction in either P-N-P or N-P-N configuration.
- THYRISTOR – It is combination of two transistor PNP and NPN .
- PHOTOVOLTIC CELL – It is specialized semiconductor diode that converts visibles light into direct current .

- Chapter 4 & 5

INSULATING MATERIAL

The material which cannot allow to pass electric current .

CHARCTERSTIC OF GOOD INSULATING MATERIAL

1. IT should have high resistance .
2. The leakage current through the material should be minimum .
3. It should have good heat dissipation capability .
4. It should have high mechanical strength to withstand vibrations .
5. It should have small dielectric loss.
6. It should also have small thermal expansion to prevent mechanical strength .
7. It should be non ignitable .

8.It should be resistant to oils , liquids , gas fumes .

SELECTION OF INSULATING MATERIAL

- Properties of the material .
- Ease of shaping .
- Material availability.
- Cost factor .

GENERAL PROPERTY OF INSULATING MATERIAL

- Electrical property
- Thermal property .
- Mechanical property & physical property
- Chemical property
- Visual properties

ELECTRICAL PROPERTY

- Resistivity (insulation resistance)
- Dielectric strength
- Dielectric loss
- dielectric constant

THERMAL PROPERTY

- Heat resistance
- Thermal resistance and thermal conductivity
- Frost resistance

MECHANICAL & PHYSICAL PROPERTY -

- Tensile strength
- compressive strength
- Brittleness
- Porosity
- Density

CHEMICAL PROPERTY -

- Chemical resistance
- Hygroscopicity
- Solubility
- Radiation resistance
- Moisture permeability
- Tropicalization

VISIUAL PROPERTY -

- Appearance
- Colour
- Crystallinity .

- CLASSIFICATION OF INSULATING MATERIAL -
- Solid
- Liquid
- Gas

PLASTICS

Plastics are the synthetic organic material which when heated can change its shape under pressure .

PROPERTIES –

1. They are light in weight .
2. They have good electrical and thermal insulation properties
3. They have good corrosion resistance.
4. They have good resistance to moisture and chemicals .
5. Plastics are non resonant .

LIMITATIONS –

1. Low operating temp.
2. High thermal expansion .
3. low strength .
4. Inflammability .

APPLICATION –

IN building industry ,for manufacturing handles for doors ,window & radiow sculpyures.

POLYVINLY CHLORIDE (P.V.C)

- This is formed from HCL ,limestone and natural gas .
- It is water resistant and wear resistant .
- It offers resistance to oxygen ,ozone and sunlight .
- It is good ageing property .
- It softness at 80 C .

- POLSTYRENE-
- It is high resistivity .
- It has good resistance to chemicals and moistures .
- It has low dielectric constant .
- It is a good electrical insulator .

- ASBESTOS -It is a inorganic material found in the earth crust having a fibrous structure . It is mainly consist of calcium and magnesium .
  - PROPERTIES –
  - its appearance Is just like glass .
  - Its fiber is rigid and silky in touch .
  - It is quite flexible .
  - it is quite fire and fume proof .

CLASSIFICATION –

1. Serpentine asbestos .
2. Amphibole asbestos .

APPLICATION –

As already discussed it is not a very good insulator material due to high moisture absorbing ability but when impregnated with insulating oil . It can be used as an insulating material at low voltages, therefore is extensively used in the form of rope, insulating tape , cloth and board .

- TEFLON – its is commonly known as poly tetra fluoro ethylene is obtained by polymerization of tetra fluoro ethylene. It can work at high temp. without being damaged. Its dielectric constant remain unchanged against time frequency and temp. changes . It highly resistant to water absorption high insulation resistance
- PROPERTIES-
- Its specific gravity is 2.1 -2.3 g/cc
- Dielectric constant of Teflon (at 60Hz) is 2.1

- BAKELITE-it is most common type of formaldehyde. It is obtained by the controlled hydrolysis of triacetate solution at temp. of about 60 C
- . PROPERTIES-
- it is tough and fairly hard insulating material .
- its very good mould ability and good impact strength .
- It has good electrical property .
- dielectric constant is 4.1.
- dissipation factor is 0.001.

APPLICATION –

It is used for insulation of low voltage capacitor ,in switches, telephone instrument , electrical sockets , t.v .

INTRODUCTION

The materials which have very high resistivity i.e. offers a very high resistance to the flow of electric current. Insulating materials plays an important part in various electrical and electronic circuits. In domestic wiring insulating material protect us from shock and also prevent leakage current.

So insulating material offers a wide range of uses in engineering applications.

FACTORS AFFECTING SELECTION OF AN INSULATING MATERIAL

1. Operating condition : Before selecting an insulating material for a particular application the selection should be made on the basis of operating temperature, pressure and magnitude of voltage and current.
2. Easy in shaping : Shape and size is also important affect.
3. Availability of material : The material is easily available.
4. Cost : Cost is also a important factor.

CLASSIFICATION OF INSULATING MATERIAL

1 According to substance and material

(a) Solids: mica,asbestos,ceramic,glass

(b)Liquids : mineral oil,synthetic varnishes etc

(c) Gases : air,hydrogen;argon;etc

CLASSIFICATION ON THE BASIS OF OPERATING TEMPERATURE

CLASS ‘Y’ INSULATION - 90 ºC

CLASS ‘A’ INSULATION - 105 ºC

CLASS ‘E’ INSULATION - 120 ºC

CLASS ‘B’ INSULATION - 130 ºC

CLASS ‘F’ INSULATION - 155 ºC

CLASS ‘H’ INSULATION - 180 ºC

CLASS ‘C’ INSULATION - >180 ºC

ELECTRICAL PROPERTIES OF INSULATING MATERIALS

INSULATION RESISTANCE

The resistance offered to the flow of electric current through the material is called insulation resistance

INSULATION RESISTANCE IS OF TWO TYPES

- Volume insulation resistance
- Surface insulation resistance

VOLUME RESISTANCE & RESISTIVITY

The resistance offered to current I_v which flows through the material is called volume insulation resistance. For a cube of unit dimensions this is called volume resistivity. As from A to C

VOLUME RESISTANCE

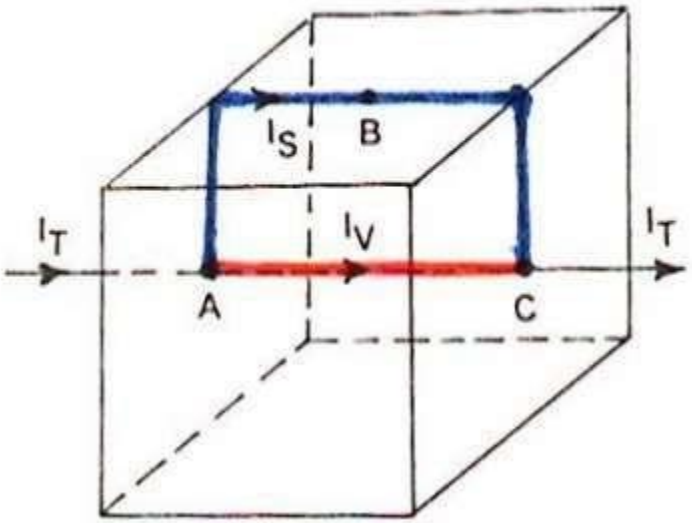

SURFACE RESISTANCE

The resistance offered to current which flows over the surface of the insulating material is called surface insulation resistance. As from A to B and then B to C

DIELECTRIC STRENGTH

Dielectric strength is the minimum voltage which when applied to an insulating material will result in the destruction of its insulating properties.

Electrical appliances/apparatus is designed to operate within a defined range of voltage.

THERMAL PROPERTIES

- HEAT RESISTANCE
- PERMISSIBLE TEMPERATURE RISE
- EFFECT OF OVERLOADING ON THE LIFE OF AN ELECTRICAL APPLIANCE
- THERMAL CONDUCTIVITY

HEAT RESISTANCE

This is general property of insulating material to withstand temperature variation within desirable limits, without damaging its other important properties.

If an insulator has favorable properties at ambient temperature but, if it is not able to retain these, it is not a good insulator.

CLASSIFICATION ON THE BASIS OF OPERATING TEMPERATURE

CLASSIFICATION ON THE BASIS OF OPERATING TEMPERATURE

CLASS ‘Y’ INSULATION - 90 ºC

CLASS ‘A’ INSULATION - 105 ºC

CLASS ‘E’ INSULATION - 120 ºC

CLASS ‘B’ INSULATION - 130 ºC

CLASS ‘F’ INSULATION - 155 ºC

CLASS ‘H’ INSULATION - 180 ºC

CLASS ‘C’ INSULATION - >180 ºC

THERMAL CONDUCTIVITY

Heat generated due to I^2R losses and dielectric losses will be dissipated through the insulator itself. How effectively this flow of heat takes place, depends on the thermal conductivity of the insulator. An insulator with better thermal conductivity will not allow temperature rise because of effective heat transfer through it to the atmosphere.

CHEMICAL PROPERTIES

SOLUBILITY

CHEMICAL RESISTANCE

WEATHER ABILITY

SOLUBILITY

In certain application insulation can be applied only after it is dissolved in some solvents . In such cases the insulating material should be soluble in certain appropriate solvent. If the insulating material is soluble in water then moisture in the atmosphere will always be able to remove the applied insulation and cause break down.

CHEMICAL RESISTANCE

Presence of gases, water, acids , alkalis and salts affects different insulators differently. Chemically a material is a better insulator if it resist chemical action.

Certain plastic are found approaching this condition. Consequently their use is very much increase.

WEATHERABILITY

Insulators come in contact with atmosphere both during manufacture or operation. The contact of insulation with atmosphere is often so complete that even the less chemically aggressive atmosphere can prove a threat to the smooth running of apparatus.

HYGROSCOPICITY

The property of insulating material by virtue of which it absorbs moisture. The insulating material should be non-hygroscopic. The absorption of moisture reduces the resistivity of the insulator.

PHYSICAL/MECHANICAL PROPERTIES

MECHANICAL STRENGTH

POROSITY

MACHIABILITY & MOULDABILITY

DENSITY

BRITTLENESS

MECHANICAL STRENGTH

The insulating material should have high mechanical strength to bear the mechanical stresses and strains during operation.

Temperature and humidity are the main factors which reduce the mechanical strength of insulating materials.

POROSITY

A material having very small holes in it is called a porous material. Insulator absorbs moisture if it is porous, which reduces its resistivity as will as mechanical strength. Porous material are impregnated with varnishes or resins to fill their pores which makes them non-porous thus better insulating materials.

BRITTLENESS

The insulating material should not be brittle. Otherwise insulators may fracture easily due to stresses.

PLASTICS

DEFINITION AND CLASSIFICATION

THERMO-SETTING MATERIALS

THERMO PLASTIC MATERIALS

PLASTICS

Plastics are basically hydrocarbons i.e. they contain hydrogen and carbon as their essential components.

Plastics are found in nature are called Natural Plastics. While man made plastics are called Synthetic Plastics and they are classified accordingly.

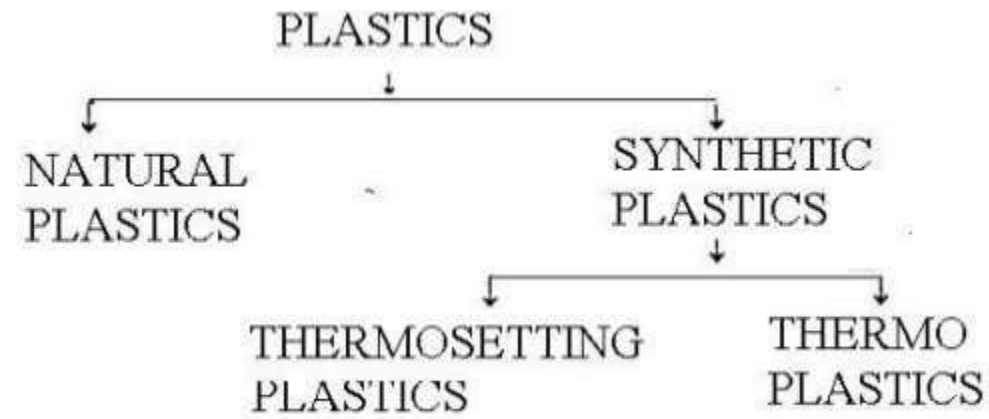
PLASTICS
NATURAL PLASTICS
SYNTHETIC PLASTICS
THERMOSETTING PLASTICS
THERMO PLASTICS

THERMOSETTING PLASTICS

The plastics which lose their properties when cooled after melting and cannot be reshaped are called thermosetting plastics.

PROPERTIES

Made by Condensation Polymerization.

Cross linked chains of molecules.

Hard and Rigid.

Higher molecular weight.

Low hygroscopicity.

Good dielectric Strength.

APPLICATIONS

Industrial Mouldings

Reflectors

Radio/TV Cabinets

Adhesives

Varnishes

Wire and Cable insulators

THERMOPLASTICS

The plastics which retain their properties even when cooled after melting and can be reshaped are called thermosetting plastics.

PROPERTIES

Made by Additional system of Polymerization

No Cross linked chains of molecules.

Less Flexible but Mechanically stronger.

Low molecular weight.

Highly Hygroscopic.

Poor Dielectric Properties.

APPLICATIONS

Mostly for Wire and Cable insulation

GLASS

It is normally transparent , brittle and hard. It is insoluble in water and the usual organic solvents.

Glass find its use in electrical industry because of its low dielectric loss, slow aging and good mechanical strength.

Glass has its limitations because it is not easy to manufacture and is dense and heavy.

APPLICATION

Molded devices such as electrical bushings, fuse bodies, insulators.

Capacitor.

Radio and television tubes

Laminated boards.

Lamps/ Fluorescent Tubes

COTTON

Cotton is natural fibrous material obtained from plants. It is used as insulator only after impregnation with oils or varnishes, which reduce its hygroscopicity.

PROPERTIES

Operating Temperature: Upto115 ºC

Highly Hygroscopic(up to 70%)

APPLICATIONS

Small Coils

Windings of small and medium Sized motors, generators and transformers.

EPOXY GLASS

Insulating material manufactured by bonding multiple layers of glass fiber impregnated with epoxy resins is called epoxy glass.

PROPERTIES

Dielectric constant: 5

Resistivity: 10^{14} ohm-m

Dielectric Strength: 0.4 kV/mm

Non-Hygroscopic

High chemical Resistance

APPLICATIONS

Base material in printed circuit boards.

Cases and terminal posts for Instruments.

DRY PAPER

The source of dry paper is cellulose obtained mainly from wood. It is obtained by pulping the wood first and then passing it through the rollers to give it the final shape.

PROPERTIES

Resistivity: $10^{5\text{-}10}$ ohm-m

Dielectric Strength: 0.16 kV/mm

High Hygroscopicity

Highly inflammable.

APPLICATIONS

It has very limited use as in

Telephone cables.

Small transformers.

POLYVINYAL CHLORIDE

Polymer of Vinyl Chloride. Polymerized in the presence of a catalyst at 50 ºC. Vinyl Chloride is obtained by the reaction of acetylene with hydro chloric acid.

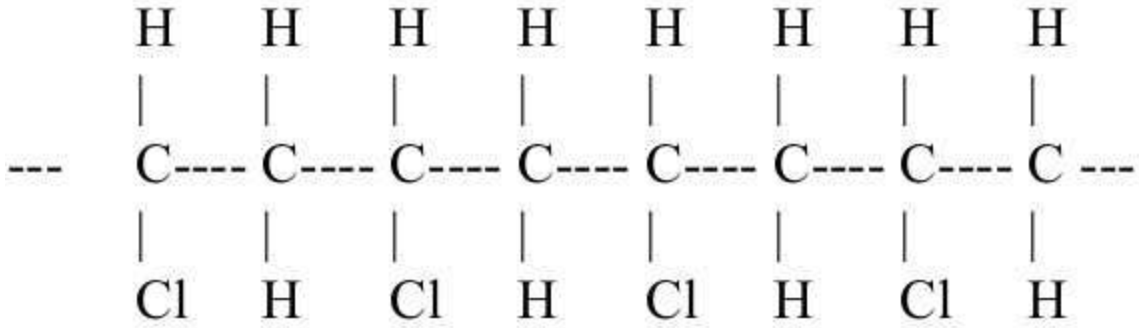
H H H H H H H H
C C C C C C C C
Cl H Cl H Cl H Cl H

PROPERTIES

Operating Temperature: -55-115 ºC

Dielectric constant: 5-6

Resistivity: $10^{12\text{-}13}$ ohm-m

Dielectric Strength: 30 kv/mm

Non-Hygroscopic/ Inflammable

Brittle/ Mechanically Strong

APPLICATIONS

Wires and Cables

Films/ Tapes

Dry Batteries

Conduits

NATURAL INSULATING MATERIALS

Mica and mica products

Asbestos and asbestos products

Ceramic materials (porcelain)

Glass and glass products

Cotton/ Silk / Jute

Paper (dry and impregnated)

Rubber

Mineral and insulating oil

Insulating varnishes

Enamels for winding wires

MICA AND MICA PRODUCTS

Mica is an inorganic mineral . It is one of the best natural insulating materials available.

It is one of the oldest insulating material of out-standing performance. India fortunately claims the biggest reserves of mica in world.

About 80% of total World requirement of mica for electrical industry is furnished by India.

MICA

Chief sources of supply are India, Brazil and U.S.A. But the best quality is available in India. The basic composition is $KH_2Al_3(SiO_4)_3$.

PROPERTIES

Strong , tough and less flexible.

Colorless, Yellow, Silver or Green.

Very good Insulating properties.

High resistance.

Not affected by alkalis.

PROPERTIES

Specific Gravity:2.6-3.6 g/cc.

Operating Temperature: 600 °C

Dielectric constant: 6

Resistivity: $10^{15\text{-}16}$ ohm-m

Dielectric Strength: 75-80 kV/mm

High chemical Resistance

APPLICATIONS

Capacitor.

Commutators of DC machines.

Electric Irons

Electric Hot plates

Electric Toasters

ASBESTOS

Found in veins of serpentine rocks hence the name Serpentine asbestos. Principal sources of supply are Canada and Africa.

PROPERTIES

Specific Gravity:1.9-2.7 g/cc.

Melting Point:1500 ºC

Dielectric Strength: very High

Hygroscopic

Bad conductor of heat

APPLICATIONS

It is used in low voltage work in the form of pipe, tape, cloth and board.

Coil winding and insulating end turns.

Arc Barriers in Circuit Breakers and Switches.

Transformers.

PORCELAIN

Porcelain are basically clays and quartz embedded in glass matrix. When used as insulators glazing is done i.e. a thin layer of glass is glazed over the insulator.

PROPERTIES

Specific Gravity:2.35-5 g/cc.

Operating Temperature:1200 ºC

Dielectric constant: 5-7

Resistivity:$10^{11\text{-}14}$ ohm-m

Low-Hygroscopicity

High chemical Resistance

High tensile strength.

APPLICATIONS

Transformer bushings.

Line Insulators(Low frequency application as dielectric loss is high)

Switches/ Plugs/ sockets/ Fuse Holders

PROPERTIES

Made by Additional system of Polymerization

No Cross linked chains of molecules.

Less Flexible but Mechanically stronger.

Low molecular weight.

Highly Hygroscopic.

Poor Dielectric Properties.

VARNISHES

Varnishes are obtained by dissolving the materials in oil or alcohol. They are used mainly for impregnation, surface coating and as adhesives.

PROPERTIES

Transparent

Non-Hygroscopic

APPLICATIONS

Surface coating on windings

Impregnation of paper, cotton.

RUBBER

Natural rubber is obtained from the milky sap of trees. It finds limited applications in the field of engineering. The reasons are

Rubber is a material which is stretchable to more than twice its original length without deformation.

NATURAL RUBBER

Natural rubber is extracted from the milky sap from a rubber trees.

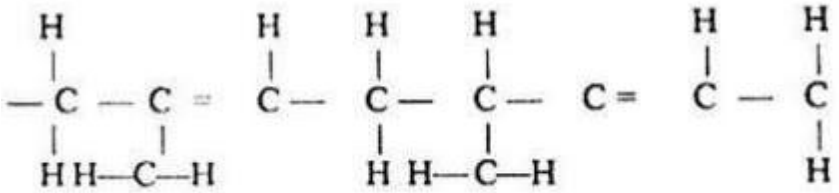

APPLICATIONS

It finds limited use in covering wires, conductors etc for low voltage operations.

Gloves, Rubber Shoes.

GASEOUS MATERIALS

Air

Hydrogen

Nitrogen and

SF_6

AIR

Like other insulating gases , the dielectric constant of the air increases linearly with increasing gas pressure. Air acts as an insulation in many electrical applications in addition to the solid or liquid insulating materials provided. Common examples are overhead transmission lines, air condensers, plugs, switches, various electrical machines and apparatus etc.

HYDROGEN

Hydrogen is rarely used as an insulator. It is used for cooling purposes in electrical machines. liquid insulating materials provided.

Common examples are overhead transmission lines, air condensers, plugs, switches, various electrical machines and apparatus etc.

NITROGEN

Nitrogen is commonly used as an insulator in electrical equipment. In many applications it is for both electrical and chemical purposes.

In many high voltages applications air is replaced by nitrogen to prevent oxidation of the other insulating materials

SULFUR HEXAFLUORIDE

When sulfur is burnt in atmosphere of fluorine, sulfur hexa fluoride is formed.

PROPERTIES

Remarkably high dielectric strength.

Non inflammable .

Cooling property is superior to those of air and nitrogen. At increase pressure its dielectric strength increases and may even become equal to that of transformer oil.

Disadvantages

To have high dielectric strength this gas must be used under high pressure which needs a scaled tank construction capable of withstanding the pressure over the whole temperature range of its commercial use.

The presence of sulfur in the molecule under some condition involve corrosion of the contacting surfaces.

APPLICATIONS

Transformer

Electric switches.

Circuit Breakers

- Chapter 6

Magnetic Materials

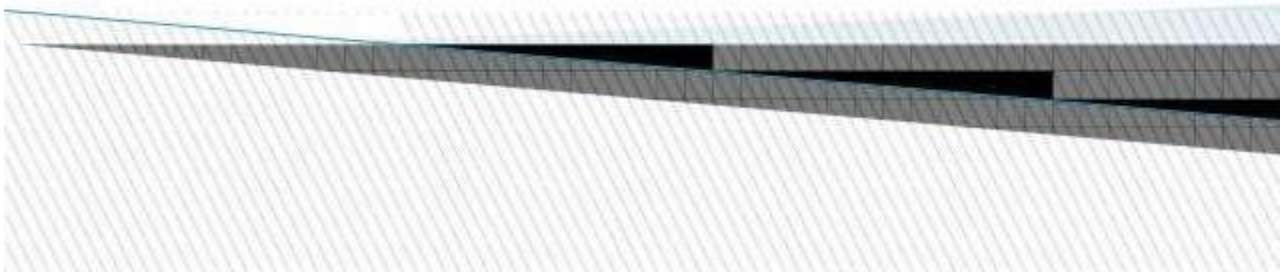

Magnetic Field

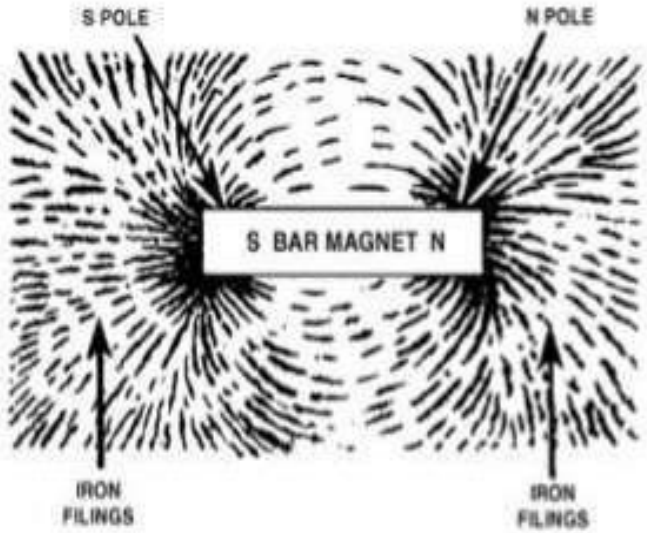

- The region around a magnet in which it exerts forces on other magnets and on objects made of iron is a magnetic field.

Magnet Field: Cause

Moving charges produce magnetic fields.

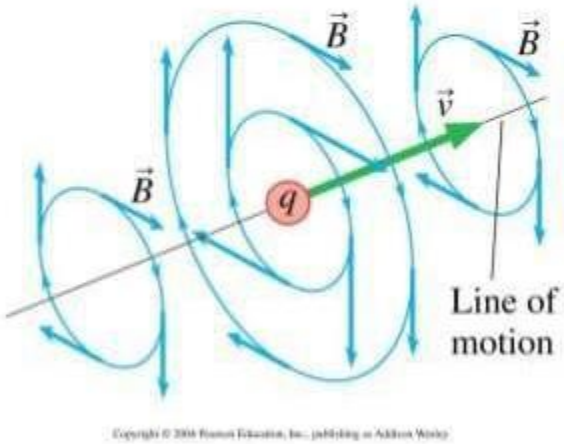

Copyright © 2004 Pearson Education, Inc., publishing as Addison Wesley

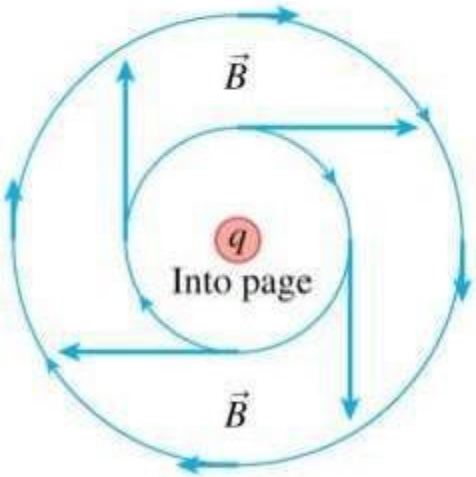

Copyright © 2004 Pearson Education, Inc., publishing as Addison Wesley

lagnetic Intensity OR Magnetising force (H

Magnetic Intensity at a point is the force experienced by a north pole of unit pole strength placed at that point due to pole strength of the given magnet.

Its SI unit is ampere-turns per linear metre.

Magnetic Field Strength or Magnetic Induction or Magnetic Flux Density (B)

Magnetic Flux Density is the number of magnetic lines of force passing normally through a unit area of a substance.

Its SI unit is weber-m^{-2} or Tesla (T).

Relation Between B & H

$$B = \mu H$$

(where μ is the permeability of the medium)

Magnetic Susceptibility (X_m)

It is the property of the substance which shows how easily a substance can be magnetised.

It can also be defined as the ratio of intensity of magnetisation (I) in a substance to the magnetic intensity (H) applied to the substance.

$$X_m = I / H$$

- Susceptibility has no unit.
- When –ve , solid is dimagnetic.
- When small range of +ve, Solid is paramagnetic.
- If large range value of +ve, Solid is ferromagnetic.
- It may be positive or negative.

Curie Temperature (C)

The temperature above which ferromagnetic material looses their magnetic properties.

Above C temp, domain structure for gets destructed and domain looses their alignment.

Relation between Magnetic Permeability (μ_r) & Susceptibility (χ_m)

$$\mu_r = 1 + \chi_m$$

Magnetic Dipole & Dipole Moment

A pair of magnetic poles of equal and opposite strengths separated by a finite distance is called a magnetic dipole.

The magnetic dipole moment is the product of the pole strength m and the separation 2l between the poles.

Magnetic Dipole Moment is $\vec{M} = m.2\hat{l}$

SI unit of pole strength is A.m .

The direction of the dipole moment is from South pole to North Pole along the axis of the magnet.

Magnetism

The Phenomenon of attracting magnetic substances like iron, nickel, cobalt, etc.

- A body possessing the property of magnetism is called a magnet.
- A magnetic pole is a point near the end of the magnet where magnetism is concentrated.
- Earth is a natural magnet.
- The region where the magnetic forces act is called the "magnetic field".

Classification Of Magnetic Materials

- Paramagnetic
- Diamagnetic
- Ferromagnetic
- Ferrimagnetic
- Antiferromagnetic

Ferromagnetic

- A type of material that is highly attracted to magnets and can become permanently magnetized is called as ferromagnetic.
- The relative permeability is much greater than unity and are dependent on the field strength.
- These have high susceptibility.

- Fe, Co, Ni, Cr, Mn are such materials.

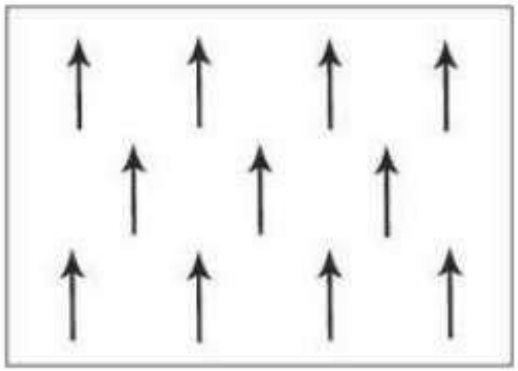

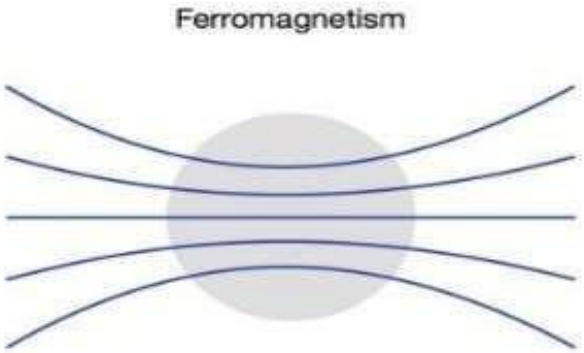

Hysteresis

The striking property of Ferro Magnetic materials is the relation between Magnetization and the strength of Magnetic field. This property is called Hysteresis.

Hysteresis Curve

- The relationship between magnetic field strength (H) and magnetic flux density (B) will follow a curve up to a point where further increases in magnetic field strength will result in no further change in flux density. This condition is called magnetic saturation till point (a).

- The plotted relationship will follow a different curve back towards zero field strength at which point it will be offset from the original curve by an amount called the *remanent flux density* or Retentity as shown in graph at point (b)
- The 'thickness' of the middle, describes the amount of hysteresis, related to the coercivity of the material as from (c) to (f).

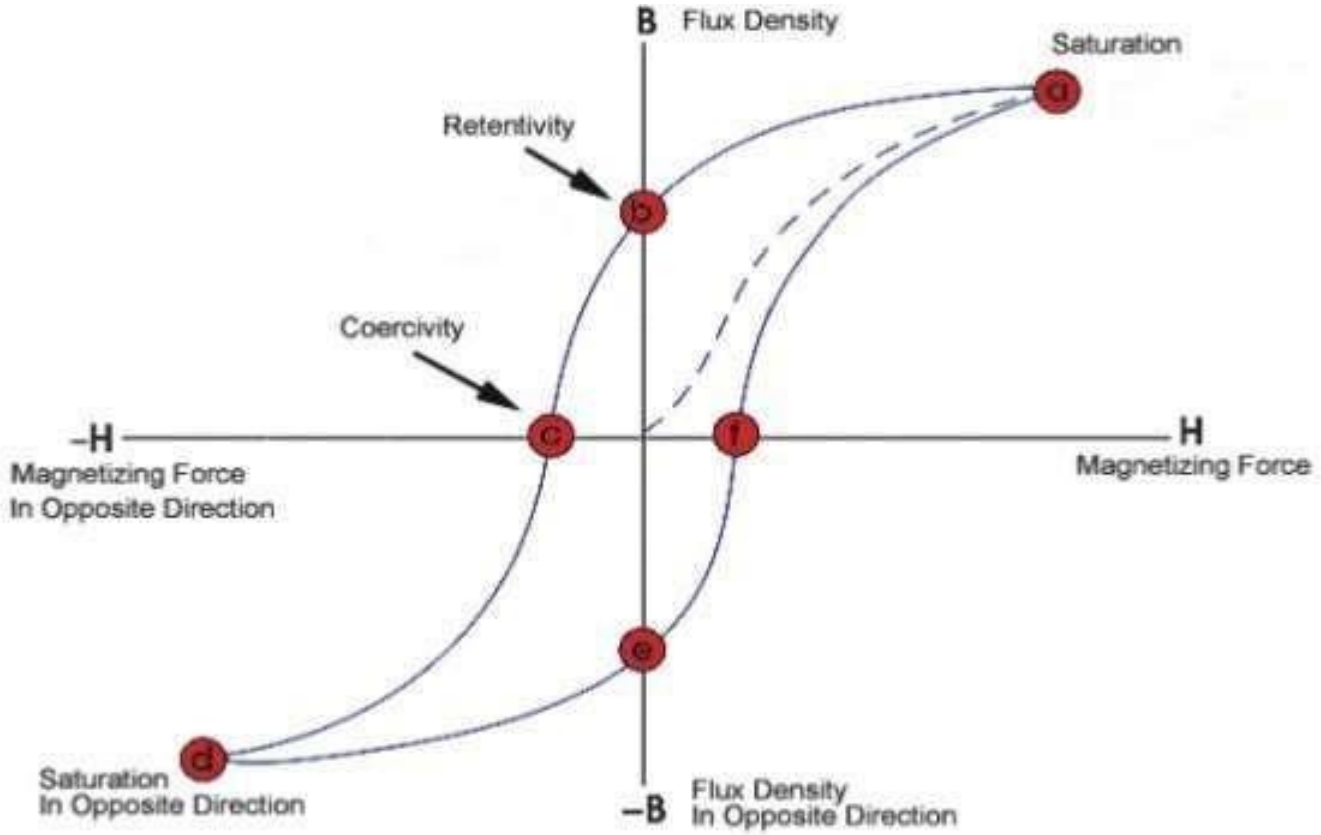
B Flux Density
Saturation
Retentivity
b
Coercivity
c
f
–H
Magnetizing Force
In Opposite Direction
H
Magnetizing Force
e
d
Saturation
In Opposite Direction
–B
Flux Density
In Opposite Direction

- If we start with no Magnetized specimen (M= 0) with the increasing values of magnetizing field H.

- The Magnetization of the specimen increases from zero to higher values and attains its maximum value at a point P, at this point the Magnetization referred as Saturation Magnetization..

- When we increase Magnetic field H there is no further increment in Magnetic moment.
- When we decrease Magnetic field H to Zero, the Magnetization M attains point Q.
- At this point Magnetization referred as residual Magnetization $M_{r.}$

- Further if we increase the Magnetic field from zero to negative values, the Magnetization of material becomes zero at a point R, at that point the Magnetic field H_c is referred as Coercivity of the specimen.

- If we increase Magnetic field H in reverse direction Magnetization of material reaches its peak value at a points S.

- On reversing the polarities of Magnetic field and increasing its strength the Magnetization slowly decreases first to residual value then to zero and finally increases to saturation state and touches the original saturation curve.

- The area of loop indicates the amount of energy wasted in one cycle of operation.

Hard Magnetic Materials

- Hard magnetic materials have large hysteresis loss due to large hysteresis loop area.
- The Coercivity and retentivity are large hence these materials cannot be easily magnetized and demagnetized.
- These materials have small values of permeability and susceptibility.
- These are used to make permanent magnets.

  Ex. Alnico alloy,Tungsten steel, cobalt steel, chromium steel, etc.

Soft Magnetic Materials

- Soft Magnetic materials have low hysteresis loss due to small hysteresis loop area.
- The coercivity and retentivity are small, hence these materials can be easily magnetized and demagnetized.
- These materials have large values of permeability and susceptibility.
- These are used to make electromagnets.

  Ex: Iron silicon alloys, Ferrous nickel alloy, Cast iron, Carbon steel, Manganese & Nickel steel, etc.

Hysteresis curve of Soft Iron and Steel

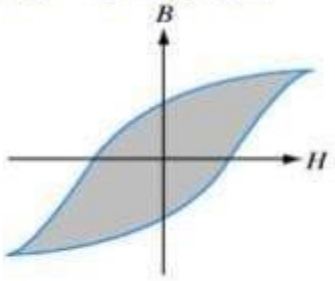

(a) **Steel**

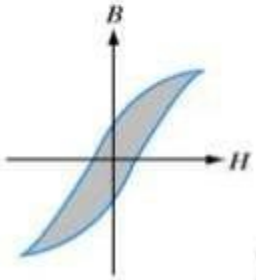

(b) **Soft Iron**

- The retentivity of soft iron > retentivity of steel.
- Soft iron is more strongly magnetized than steel.
- Coercivity of soft iron < Coercivity of steel.
- Hence, soft iron loses its magnetism more rapidly than steel does.

Ferrite

A ferrite is a type of ceramic compound composed of iron oxide (Fe_2O_3) combined chemically with one or more additional metallic elements.

Ferrites

- Ferrites are non-conducting magnetic media so eddy current and ohmic losses are less than for ferromagnetic materials.
- Ferrites are often used as transformer cores at radio frequencies (RF).
- Low dielectric loss.
- Low coersive force.
- They are mechanically hard, brittle and difficult to machined.
- Very high resistivity.
- Types of Ferries are, 1) Soft, 2) Hard,3) Rectangular loop and 4) Microwave Ferrites.
- Some material have hysterisis loop, rectangular in shape.
- Dielectric constant is of the order of 10 to 12.

Uses Of Ferrites

1.)Ferrite cores are used in electronic inductors, transformers, and electromagnets.

2.)Ferrite powders are used in the coatings of magnetic recording tapes.

3.)Most common radio magnets, including those used in loudspeakers, are ferrite magnets.

4.)It is a common magnetic material for electromagnetic instrument pickups.

Eddy currents generate resistive **losses** that transform some forms of energy, such as kinetic energy, into heat. This Joule heating reduces efficiency of iron-core transformers and electric motors and other devices that use changing magnetic fields.

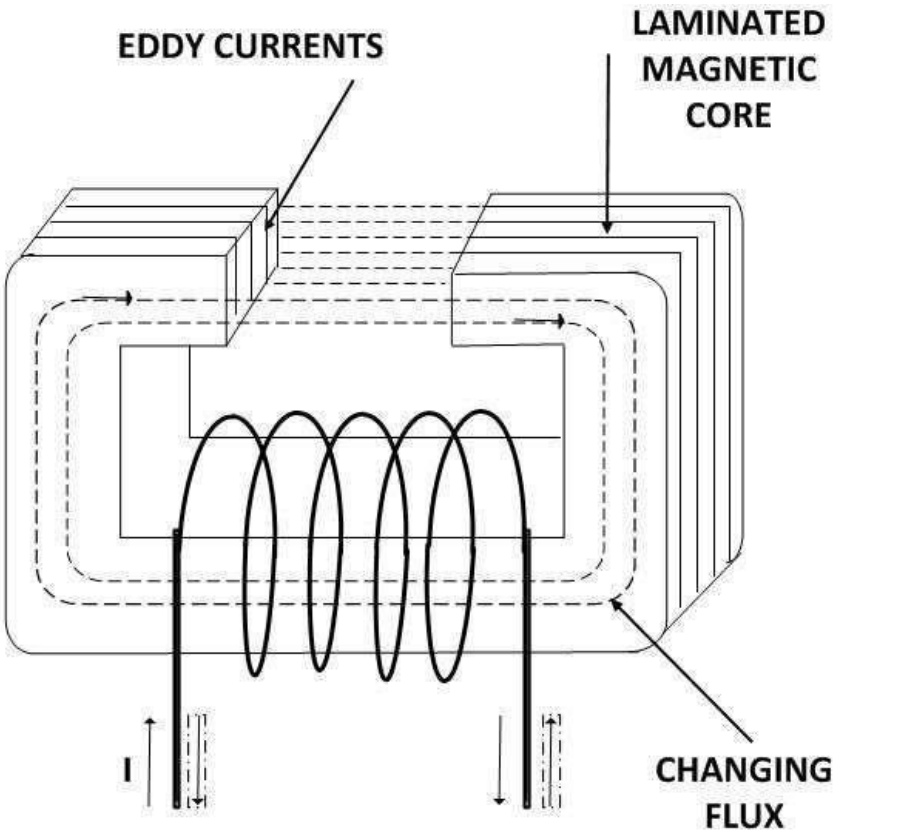

By plotting values of flux density, (B) against the field strength, (H) we can produce a set of **curves** called**Magnetisation Curves**, Magnetic Hysteresis **Curves**or more commonly B-H **Curves** for each type of core material used as shown below

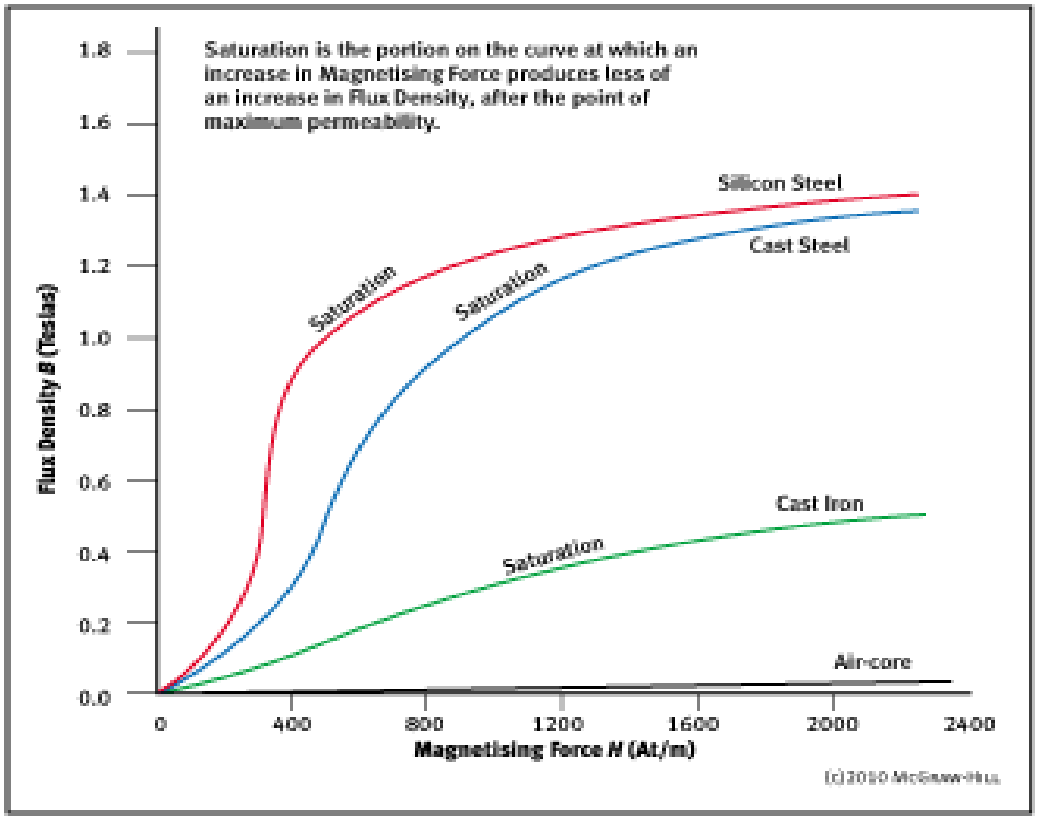

Figure 2

Cold Rolling of Steel

It is done to reduce the thickness of the steel in the range of 0.1 mm to 2 mm which cannot be achieved with hot rolling. During this process, under carefully controlled conditions optimum magnetic characteristics are achieved in the direction of rolling. This direction is also known as Goss texture (110)[001] which is the direction of easy magnetization in the rolling direction. This can be shown in the figure below. The grain-oriented steel is not used in rotating electrical machines in which the magnetic field is in the plane of sheets but the angle between the magnetic field and rolling direction keeps changing. For this purpose nongrain oriented silicon steel is used

- The best examples of soft magnet are **iron-silicon alloys**,**nickel-iron alloy** and **iron**. Hard magnetic materials: These magnetic materials retain their magnetism in absence of magnetic field and also known as permanent magnets. **Alloys**composed of **iron**, **cobalt** and **aluminum** are generally acted as hard magnetic materials.

- The best examples of soft magnet are **iron**-silicon **alloys**,**nickel-iron alloy** and **iron**. Hard magnetic materials: These magnetic materials retain their magnetism in absence of magnetic field and also known as permanent magnets. **Alloys**composed of **iron**, **cobalt** and **aluminum** are generally acted as hard magnetic materials.

- Chapter 7

TEMPERATURE MEASURING DEVICE

THERMOCOUPLE

THERMOCOUPLE :-

- A Thermocouple is a temperature measuring device consisting of two dissimilar conductors that contact each other at one or more spots.
- A Thermocouple is a sensor made from two dissimilar metals. When these two metals are fused together at one end they create a junction.
- When the junction experiences changes in temperature, a very small voltage is created .which corresponds to a temperature reading.

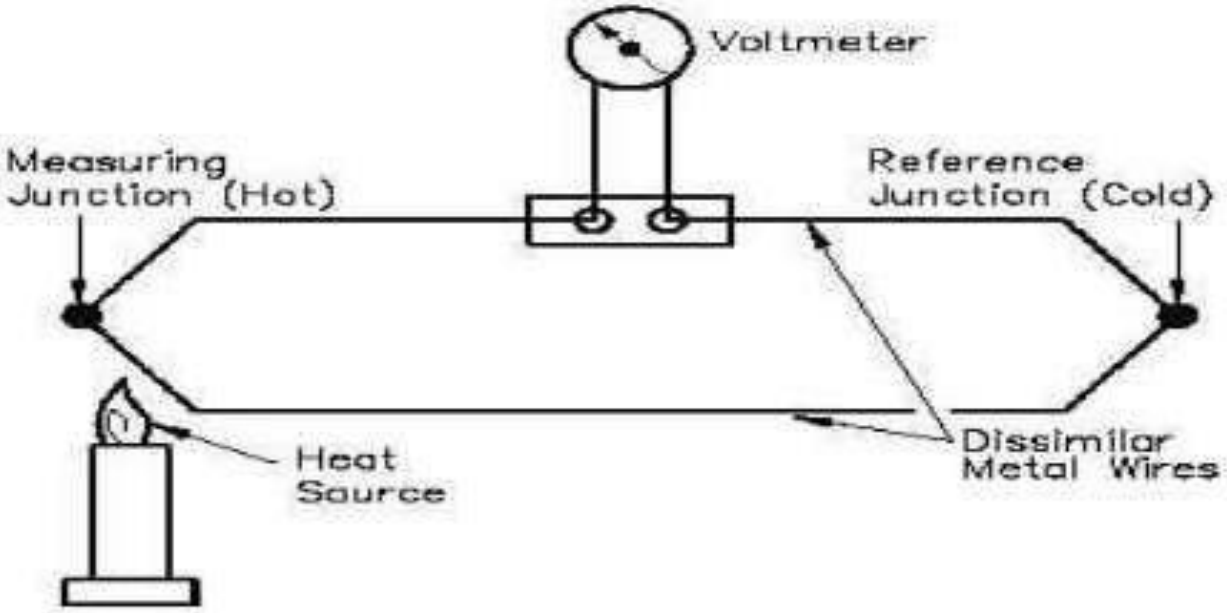

WORKING PRINCIPLE AND TYPES :-

- Thermocouples operate under the principle that a circuit made by connecting two dissimilar metals produces a measurable voltage (emf-electromotive force) when a temperature gradient is imposed between one end and the other.

- The EMF generated by the Seebeck effect is due to the temperature gradient along the wire. The EMF is not generated at the junction between two dissimilar wires.

- TYPES OF COUPLES.
  - Type K
  - Type J
  - Type T

Measuring Temperature :-

- To measure temperature using a thermocouple, you can't just connect the thermocouple to a measurement system (e.g. voltmeter)
- The voltage measured by your system is proportional to the temperature difference between the primary junction (hot junction) and the junction where the voltage is being measured (Ref junction)

To determine the absolute temperature at the hot junction...

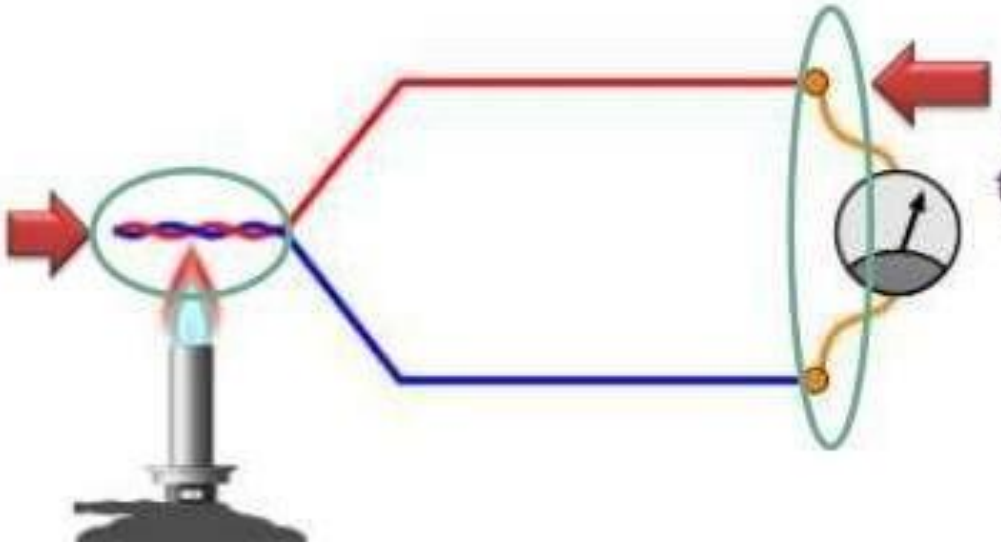

You need to know the temperature at the Ref junction!

Applications

1.Steel industry

2.Gas appliance safety

3.Thermopile radiation sensors

4.Manufacturing

5.Power production

6.Thermoelectric cooling

7.Process plants

8.Thermocouple as vacuum gauge

(Gas appliance safety)

ADVANTAGES

1.Very wide temperature range (1.2 K to 2300 dig C)

2.Fast response time

3.Available in small sheath sizes

4.Low initial cost

5.Durable.

LIMITATIONS

- For accurate temperature measurement, cold junction compensation is necessary.
- The EMF induced versus temperature characteristics is somewhat non-linear.
- Stray voltage pickup is impossible.
- In many application, amplification of signal is required.

Fuse elements of fast acting **fuses** and HV **fuses** are primarily made of silver (Ag). Silver plated copper is also commonly used. As a

rule, **fuse** elements of time delay**fuses** contain low melting point **materials**, e.g. tin (Sn) or zinc (Zn) and alloys thereof.

1 cartridge fuse
2 H.R.C. FUSE
3. KIT KAT FUSE

Kit kat fuse

Kit kat fuse is a semi enclosed **fuse** or rewirable **fuse** used for domestic applications. There are two parts: **fuse** wire and **fuse** base. ...

The **fuse** wire is attached to **fuse** carrier which can be removed or connected to **fuse**base

Cartridge type fuse

Cartridge Fuses. Share. **Cartridge fuses** are used to protect motors and branch circuits where higher amps or volt ratings are required. They are available in a wide variety of sizes, amp and volt ratings up to 600Vac and 600 amps.

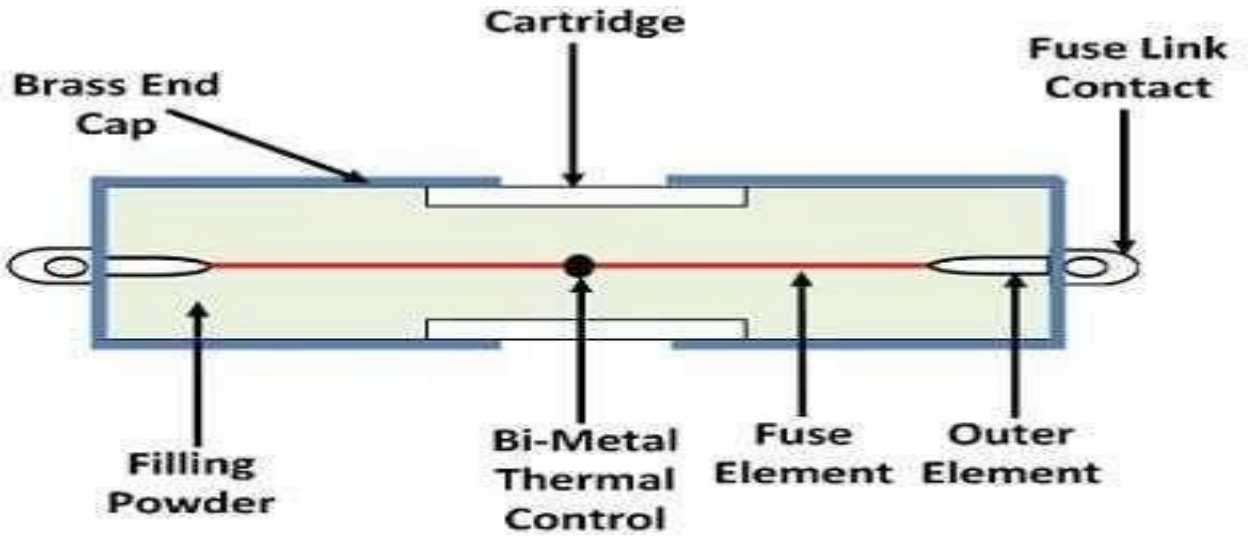

H.R.C FUSE

HRC Fuse or High Rupturing Capacity **Fuse**. **HRC fuse** or high rupturing capacity **fuse**- In that type of **fuse**, the **fuse**wire or element can carry short circuit heavy current for a known time period. During this time if the fault is removed, then it does not blow off otherwise it blows off or melts.

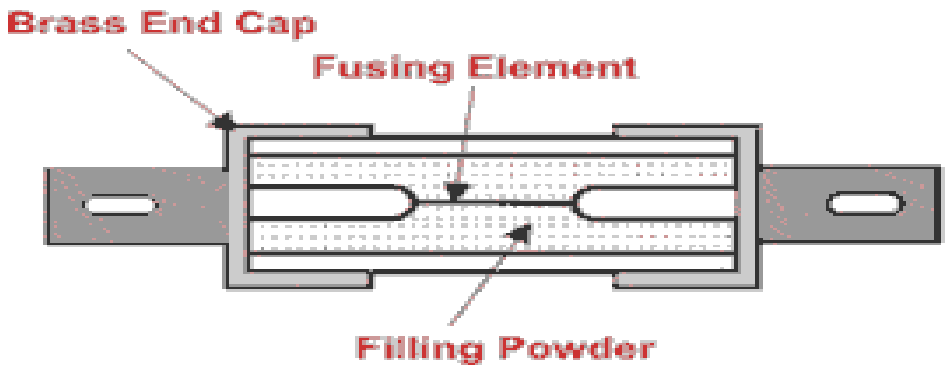

Construction of HRC Fuse

- Chapter 8

DC Machine Construction

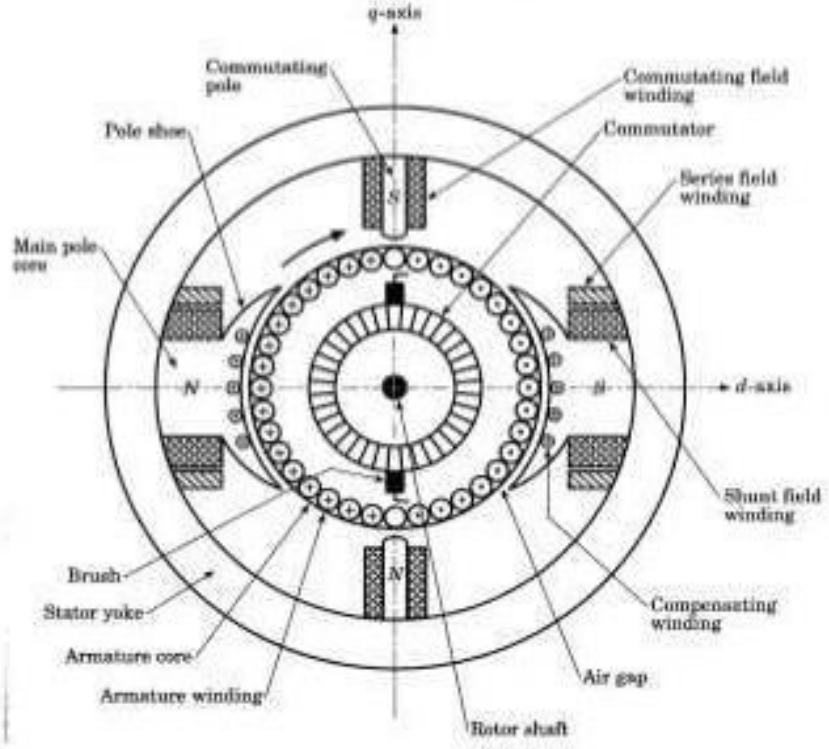

Figure 8.1 General arrangement of a dc machine

DC Machines

- The stator of the dc motor has poles, which are excited by dc current to produce magnetic fields.
- In the neutral zone, in the middle between the poles, commutating poles are placed to reduce sparking of the commutator. The commutating poles are supplied by dc current.
- Compensating windings are mounted on the main poles. These short-circuited windings damp rotor oscillations. .

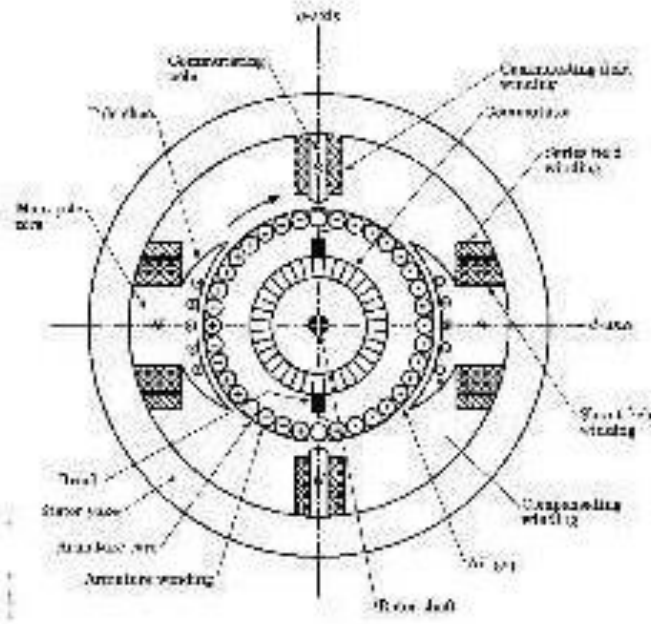

DC Machines

- The poles are mounted on an iron core that provides a closed magnetic circuit.
- The motor housing supports the iron core, the brushes and the bearings.
- The rotor has a ring-shaped laminated iron core with slots.
- Coils with several turns are placed in the slots. The distance between the two legs of the coil is about 180 electric degrees.

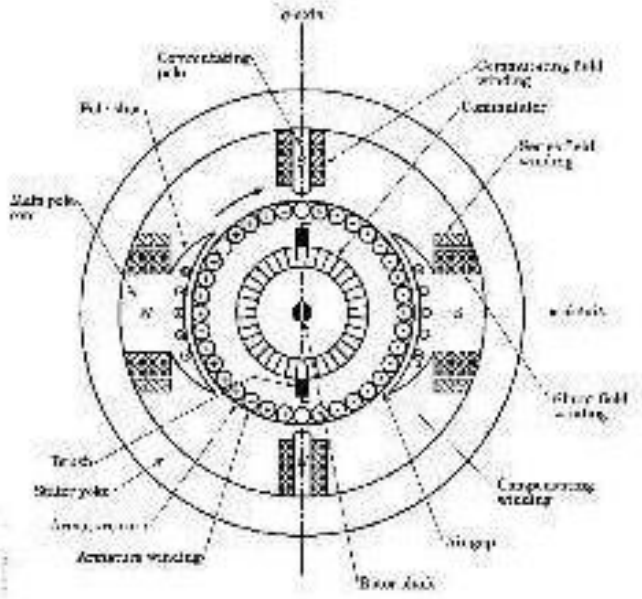

DC Machines

- The rotor has a ring-shaped laminated iron core with slots.
- The commutator consists of insulated copper segments mounted on an insulated tube.
- Two brushes are pressed to the commutator to permit current flow.
- The brushes are placed in the neutral zone, where the magnetic field is close to zero, to reduce arcing.

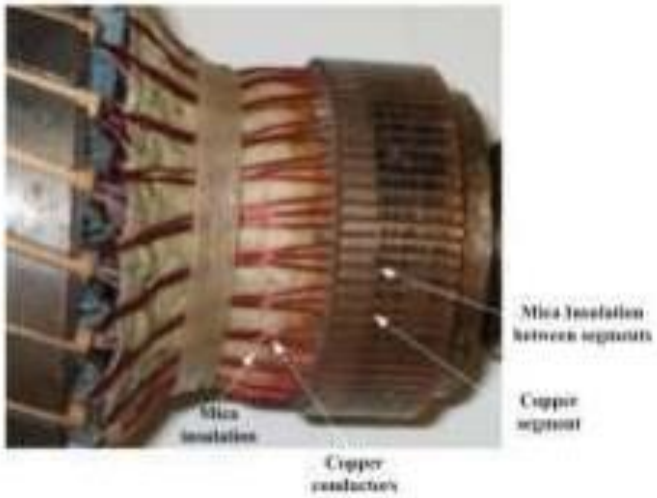

DC Machines

- The *commutator* switches the current from one rotor coil to the adjacent coil,
- The switching requires the interruption of the coil current.
- The sudden interruption of an inductive current generates high voltages .
- The high voltage produces flashover and arcing between the commutator segment and the brush.

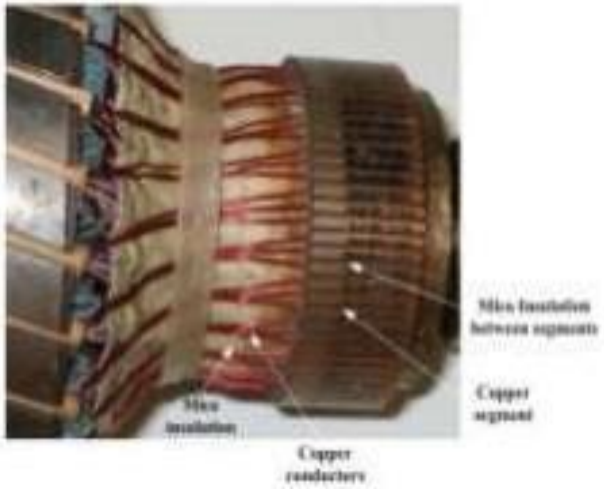

DC Machine Construction

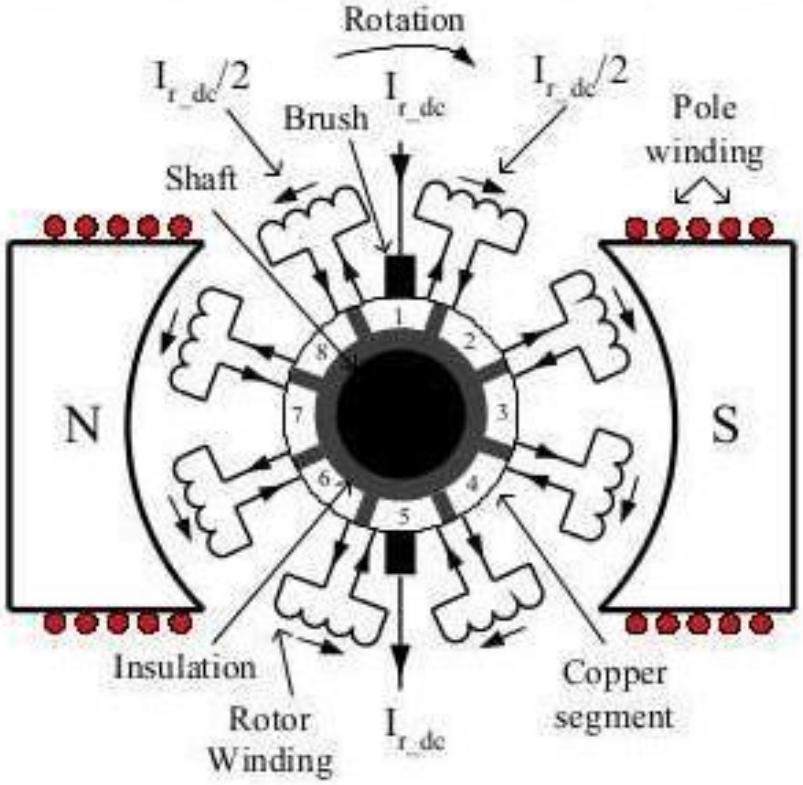

Figure 8.2 Commutator with the rotor coils connections.

What is Transformer?

- An Electrical device which changes given an Alternating emf into larger or smaller alternating emf.
- It is like a power converter that transfers electrical energy from one circuit to another through inductive coupled conductors. i.e transformer's coils.
- Transformers are used in our homes to keep voltage upto 220 volt.
- Transformer helping to form a safe Electric Power system is shown in Figure:

CONSTRUCTION

- It consists of an iron core on which two separate coils of insulated copper wire are wound.
- The Coil to which A.C power voltage is supplied is Primary Coil.
- The Coil to which this power is delievered to circuit is Secondary Coil.
- The Secondary Coil has a load resistance connected to safe transformer from being heating up.
- These coils have no electrically linked as they have magnetical links.
- Construction of a simple transformer can be seen from figure:

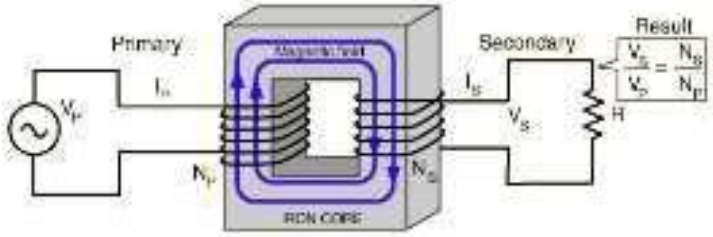

CORE

- Core material should have a high permeability and a high flux density
- A steel core's magnetic hysteresis means that it retains a static magnetic field when power is removed.
- Certain types have gaps inserted in the magnetic path to prevent magnetic saturation. These gaps may be used to limit the current on a short-circuit.
- Distribution transformers can achieve low off-load losses by using cores made with amorphous (non-crystalline) steel having very large permeability .
- Various type of cores are used : Steel cores, Solid cores, Air cores , Toroidal core etc. depending upon the frequency of operation

WINDINGS

- Primary and secondary conductors are coils of conducting wire because each turn of the coil contributes to the magnetic field, creating a higher magnetic flux density than would a single conductor.
- Larger power transformers are wounded with wire, copper or aluminum rectangular conductors, or strip conductors for very heavy currents.
- High frequency transformers operating in the tens to hundreds of kilohertz uses windings made of Litz wire, to minimize the skin effect losses in the conductors.
- Windings on both primary and secondary of a power transformer may have external connections (called taps) to intermediate points on the winding to allow adjustment of the voltage ratio

WINDINGS

- Thickness of winding also plays a major part in designing process.
- The voltage that each winding sees determine the wires insulation thickness.
- Once this voltage is known, the diameter of the selected insulated wire can be used
- By knowing the wire diameter, the number of turns per layer is calculated
- Number of layers are calculated using the window height and winding margins.
- The windows are the openings on either side of the core. The window area = window width * height

INSULATION

- The conductor material must have insulation to ensure the current travels around the core, and not through a turn-to-turn short-circuit.
- In power transformers, the voltage difference between parts of the primary and secondary windings can be quite large.
- So insulation is inserted between layers of windings to prevent arcing.
- Transformer may also be immersed in transformer oil that provides further insulation.
- To ensure that the insulating capability of the transformer oil does not deteriorate, the transformer casing is completely sealed against moisture ingress.

VARNISHING

- The main purpose of the varnish, besides increasing the electrical insulation, is to keep any form of moisture from effecting the coil
- Varnish dip is done in a vacuum chamber.
- Accomplished by preheating the conductor coils and then, when heated, dipping them in varnish at an elevated temperature.
- The coils are then baked to cure the varnish.

COOLANT

- To remove the waste heat produced by losses.
- The windings of high-power or high-voltage transformers are immersed in transformer oil - a highly-refined mineral oil that is stable at high temperatures
- Earlier, polychlorinated biphenyl (PCB) was used as it has very high ignition temperature and is highly stable.
- Now a day, nontoxic, stable silicone-based oils or fluorinated hydrocarbons are used.
- To improve cooling of large power transformers, the oil-filled tank may have external radiators through which the oil circulates by natural convection

BUSHINGS

- An **electrical bushing** is an insulated device that allows the safe passage of electrical energy through an earth field.
- Larger transformers are provided with high-voltage insulated bushings made of polymers or porcelain
- A basic porcelain bushing is a hollow porcelain shape that fits through a hole in a wall or metal case, allowing a conductor to pass through its center, and connect at both ends to other equipment..
- Outside surfaces have a series of skirts to increase the leakage path distance to the grounded metal case
- The inside of the porcelain bushing is often filled with oil to provide additional insulation

NON-CONVENTIONAL ENERGY SOURCE

SEMESTER-3rd

BRANCH-ELCTRICAL ENGG.

LEARNING OUTCOMES

After undergoing the subject, the students will be able to:

1. Explain the importance of non-conventional energy sources for the present energy scenario.
2. Classify various non-conventional sources of energy
3. Explain principle of solar photovoltaic energy conversion and the applications of solar energy in different fields.
4. Explain basic conversion technologies of biomass, wind energy, geo-thermal, tidal energy, hydro energy and its applications.
5. Explain direct energy conversion systems like magneto hydrodynamics and fuel cells and its applications.

•DETAILED CONTENTS

1. Basic of Energy: (06 periods)

Classification of Energy-primary and secondary energy, commercial and non-commercial energy, importance of non conventional energy sources, present scenario, future prospectus, energy scenario in India, sector-wise energy consumption (domestic, industrial, agriculture etc.)

2. Solar Energy: (12 periods)

Principle of conversion of solar radiation into heat, photo-voltaic cell, electricity generation, application of solar energy like solar water heaters, solar furnaces, solar cookers, solar lighting, solar pumping.

3. Bio-energy: (10 periods)

Bio-mass conversion technologies- wet and dry processes. Methods

for obtaining energy from biomass. Power generation by using gasifiers.

4. Wind Energy: (10 periods)

Wind energy conversion, windmills, electricity generation from wind types of wind mills, local control, energy storage.

5. Geo-thermal and Tidal Energy: (10 periods)

Geo-thermal sources, Ocean thermal electric conversion, open and closed cycles, hybrid cycles. Prime movers for geo-thermal energy conversion. Steam Generation and electricity generation.

6. Magneto Hydro Dynamic (MHD) Power Generation (04 periods)

7. Fuel Cells (08 periods)

Design and operating principles of a fuel cell, conversion efficiency, work output and e.m.f of fuel cells, applications.

8. Hydro Energy – Mini & Micro hydro plants

,

Chapter	Name	Page No.	Remarks
1	Basics of Energy	6-8	
2	Solar Energy	9-18	
3	Bio-Energy	19-29	
4	Wind Energy	30-41	
5	Geo thermal and tidal energy	42-57	
6	MHD power generatiom	58-61	
7	Fuel cell	62-73	
8	Hydro energy	74-	

CHAPTER-1 BASICS OF ENERGY

Energy:- The capacity to do a work is called energy

Different forms of energy:-

i. Electrical Energy

ii. Mechanical Energy

iii. Chemical Energy

iv. Heat Energy

v. Nuclear Energy

vi. Classification of Energy:-

1. Primary Energy sources

2. Secondry Energy sources

1. Primary Energy sources

The Energy of sources which can be used directly as they appear in nature. Example:- wood, coal, oil, natural gas etc.

2. Secondry Energy sources

These sources of energy derive from transformation of primary Energy

Sources. Example:- petrol etc.

COMMERCIAL AND NON-COMMERCIAL ENERGY

1. Commercial Energy:- The sources of energy are available to user at some cost. These are exhaustible

Example:- coal,petrol,gas, etc.

2. Non-Commercial Energy:- The sources of energy are available to user at free of cost.These are renewable.

Example:- solar energy, firewood.

Advantages of Electrical Energy over the other forms of Energy:-

Energy is the form of electrical energy is most easy to use.

The following advantages of Electrical Energy:-

i. It is pollution free and environment friendly.
ii. Electrical energy can be easily converted into other forms of energy.
iii. It can be easily transmitted
iv. Efficiency of transmission in high
v. Voltage can be easily stepped up or stepped down.
vi. Control of appliance using Electrical energy is easy and safe.

Renewable Energy sources:-

i. Solar Energy

ii. Wind Energy

iii. Tidal Energy

iv. Bio-Gas

v. Geo- Thermal Energy

vi. Hydro Energy

Renewable source of Energy:- These sources of energy which are used again and again.

Non-renewable source of Energy:- These sources of energy which do not used again and again.

CHAPTER- 2 SOLAR ENERGY

SOLAR ENERGY:- Solar is related with sun and power or energy obtained from sun is called solar energy.

It is natural source of energy.

Types of Rays:-

i.Ultraviolet Rays

ii.Visible Rays

iii.Infrared Rays

Principle of conversion of solar radiation into heat energy:-

It depends upon green house effect.Solar energy can produce by sunlight either through direct or indirect conversions

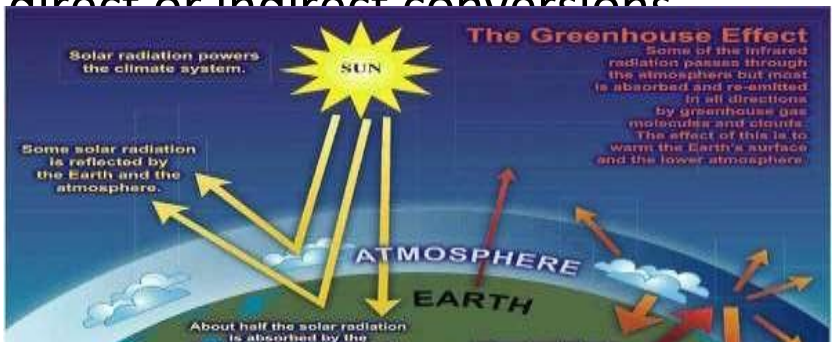

The infrared rays are the main source of heat and these rays increases the temperature of earth this effect is known as **Green house effect.**

PHOTO-VOLTAIC CELL:-

It is a semiconductor device which convert energy sunlight into electricity is called photo voltaic cell.

The photo voltaic means light and volt is related to E.M.F.

WORKING OF PHOTO- VOLTAIC CELL:-

When sun rays falls on top of p- type semiconductor and penetrate into lower n-type semiconductor material these sun rays(photon) absorbed by semiconductor material and generate holes electrons pair. Due to this electrical field is established. Current flows from p- type material to N- type material.

GENERATION OF ELECTRICITY FROM PHOTO-VOLTAIC CELL

As shown in figure below:- how electricity is generated in photo voltaic cell.

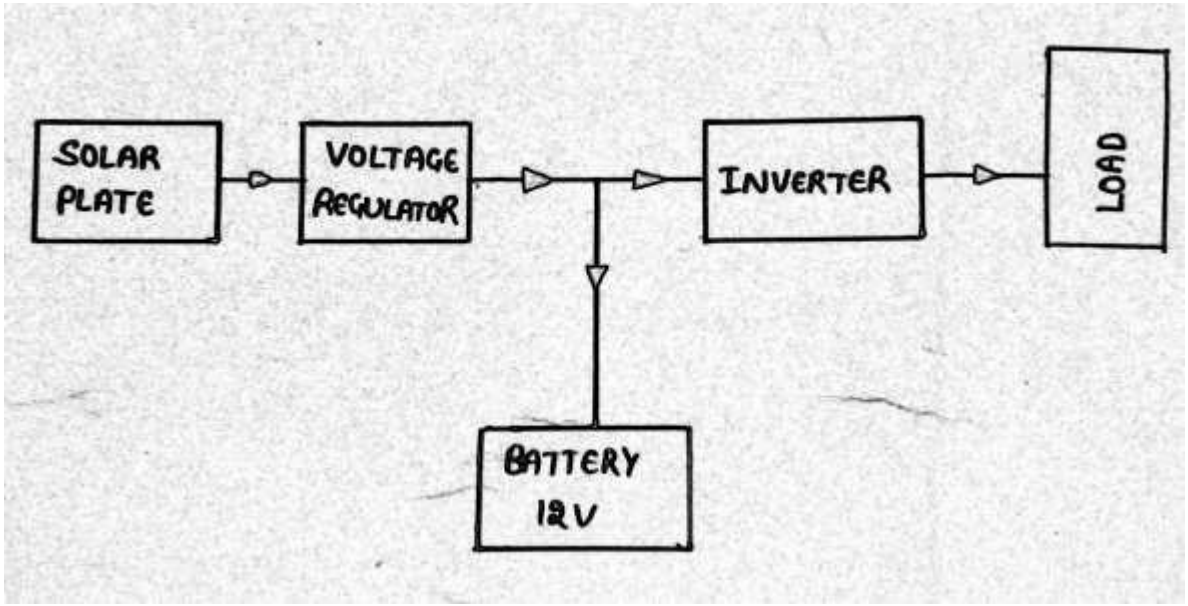

It consists of:-

i. Solar plate.
ii. Voltage regulator
iii. Inverter
iv. Battery 12v

v. Load **(note:-voltage of one solar cell is 0.39 approx)**

APPLICATION OF SOLAR ENERGY

1. Solar water heater:-It is a device by which water can be heated by using solar Energy.

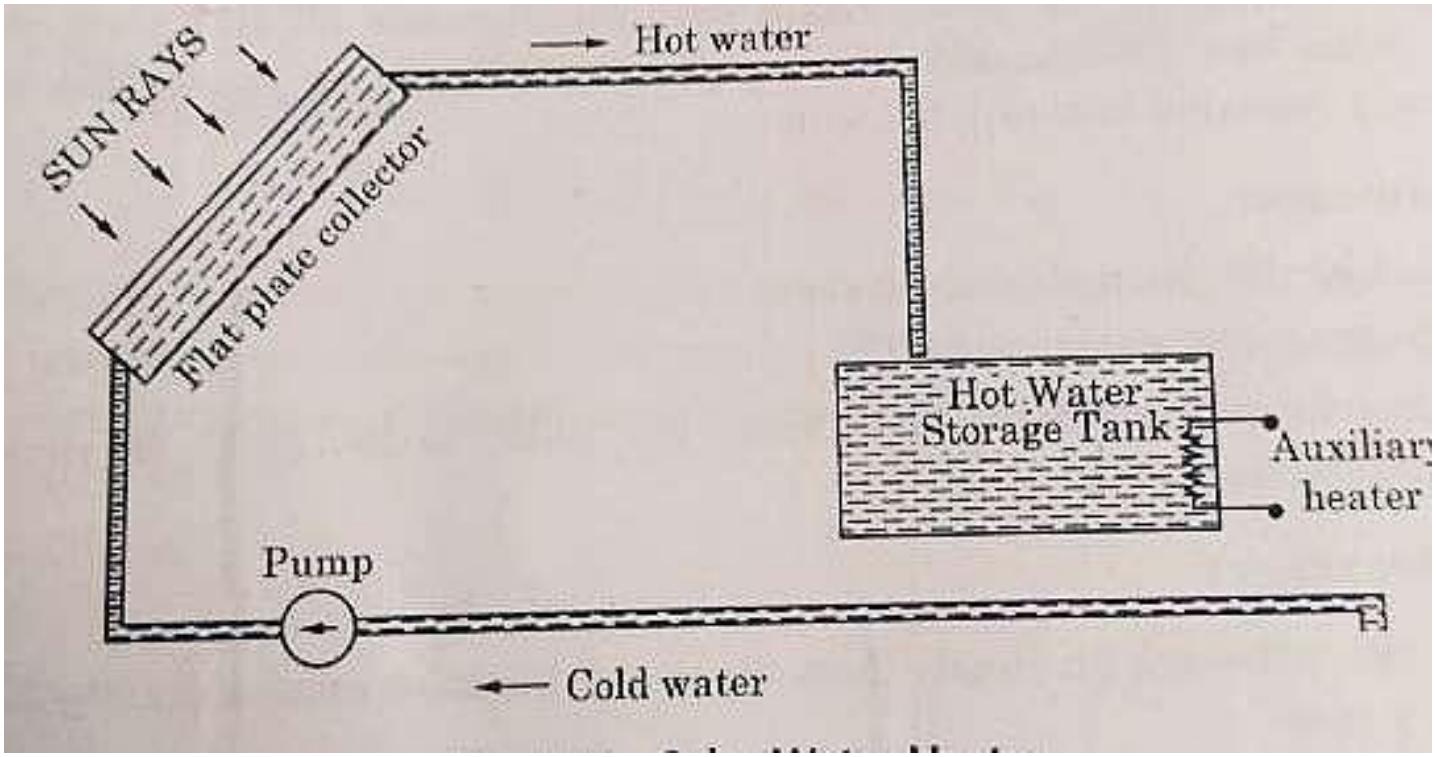

CONSTRUCTION OF SOLAR WATER HEATER

Advantages of solar water heater:-

i. Longer life spent 12-15 years

ii. Heat the water at 80° C.

iii. No running cost

Dis-advantages of solar water heater:-

i. Initial cost is high

ii. Depend on whether condition.

iii. Occupies large space.

2. Solar furnace:-A solar furnace is a structure that uses concentrated solar power to produce high temperatures, usually for industry. Parabolic mirrors or heliostats concentrate light (Insolation) onto a focal point.

CONSTRUCTION OF SOLAR FURNACE :-

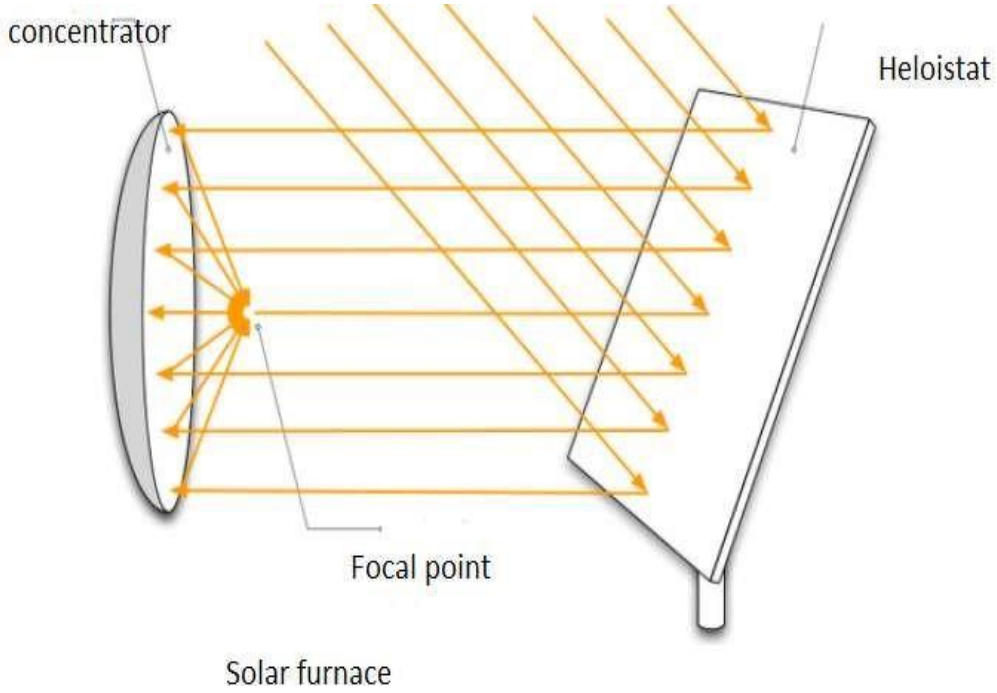

Solar cooker :-A solar cooker is a device that uses sunlight from energy. They use no fuel and cost nothing to run.

They also help slow deforestation and desertification. Another benefit of solar cooking is that unlike cooking with fire, Solar cookers don't pollute the air. Solar cookers are also sometimes used for cooking outside, especially when using fire is risky or there is no fuel. The solar cooker is very useful. It is a renewable source of energy.

CONSTRUCTION OF SOLAR COOKER :-

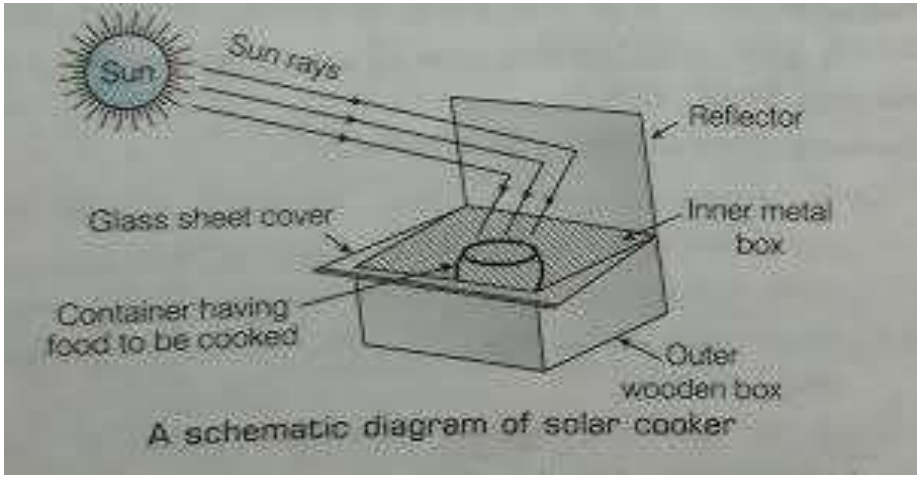

A schematic diagram of solar cooker

Solar lighting:- A solar light uses energy from the sun to produce light. (Solar light can also refer to natural light coming from the sun.) ... During the day, they use solar energy to charge a battery, and at night, or when it's too dark to charge the battery, the battery runs a light.

CONSTRUCTION OF SOLAR LIGHTING:-

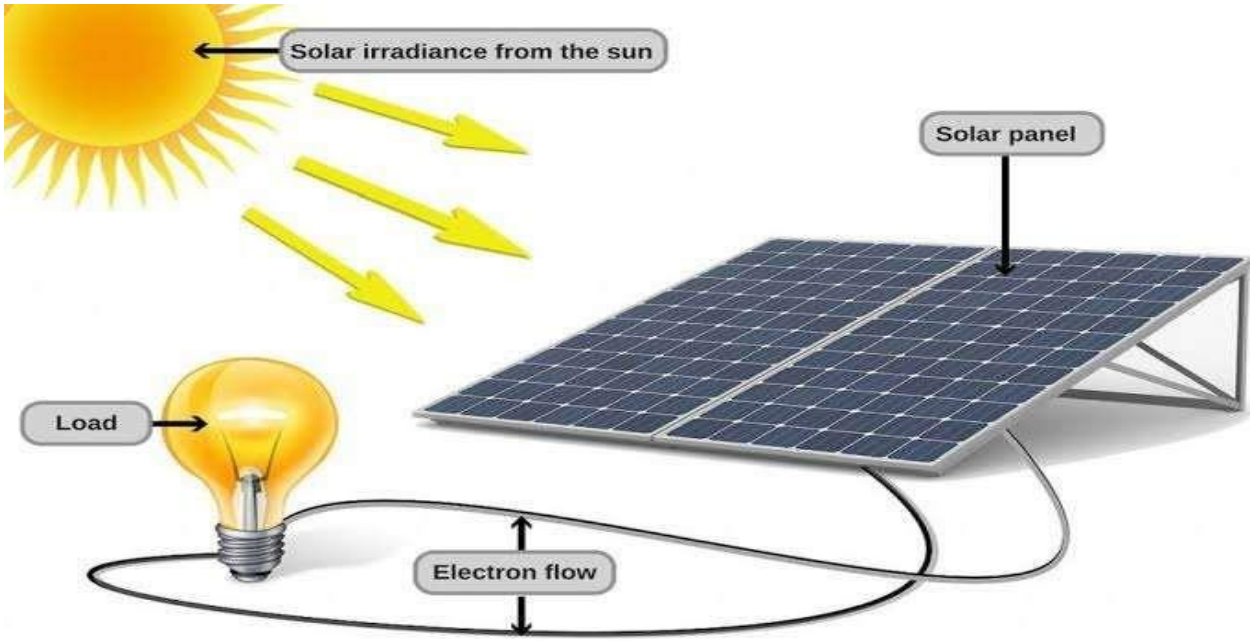

Solar pumping:- A solar-powered pump is a pump running on electricity generated by photovoltaic panels or the radiated thermal energy available from collected sunlight as opposed to grid electricity or diesel run water pumps.

CONSTRUCTION OF SOLAR PUMPING:-

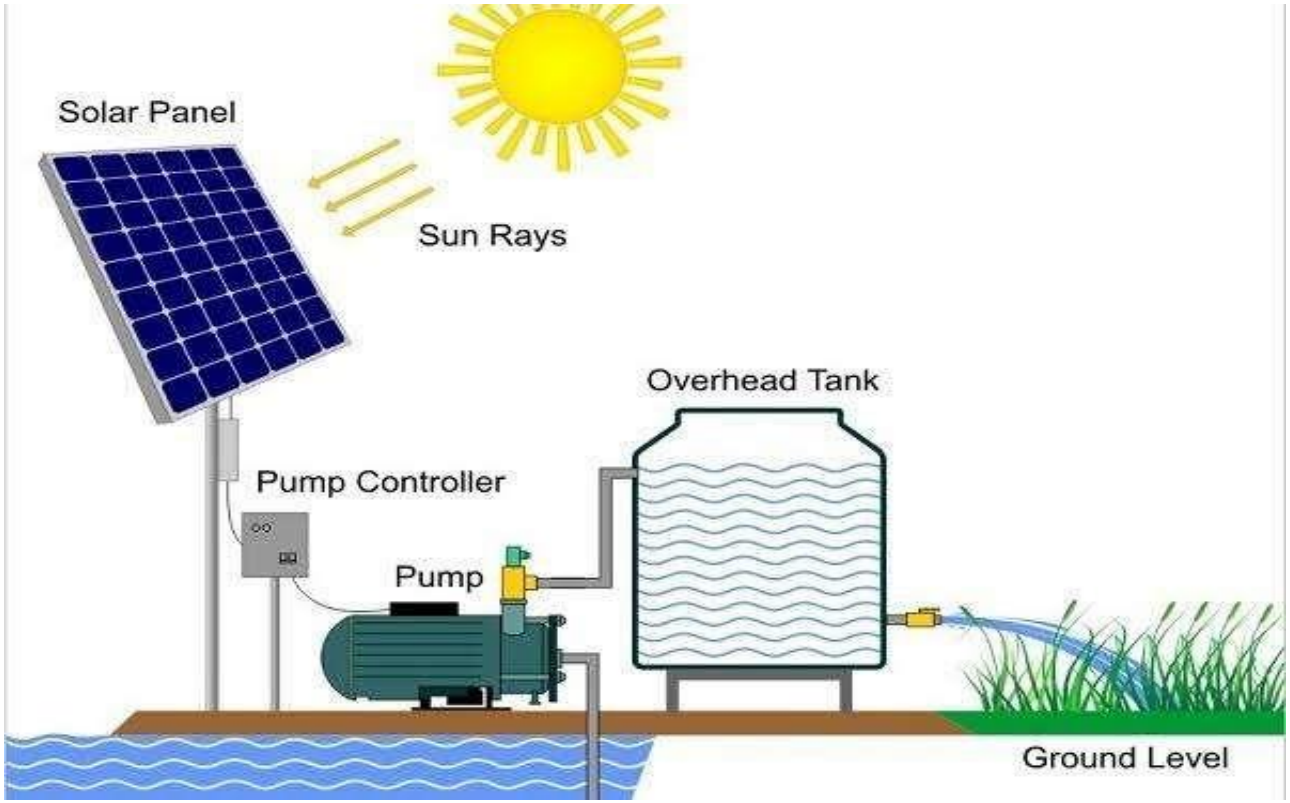

SYMBOL OF SOLAR CELL:-

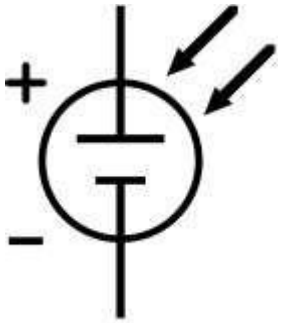

CHAPTER-3 BIO ENERGY

BIO-MASS

It is an organic matter which is produce by microrganism,trees and plants both terrestrial.

The energy obtained from biomass is called **Bio Energy.**

It is produced from photo-synthesis.

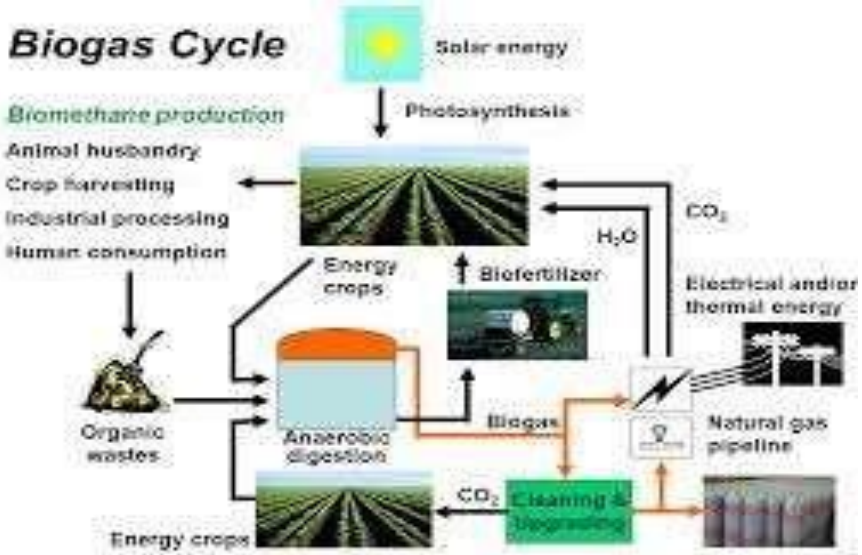
Biogas Cycle
Solar energy
Photosynthesis
Biomethane production
Animal husbandry
Crop harvesting
Industrial processing
Human consumption
CO_2
H_2O
Energy crops
Biofertilizer
Electrical and/or thermal energy
Organic wastes
Anaerobic digestion
Biogas
Natural gas pipeline
CO_2
Cleaning & Upgrading
Energy crops

Photosynthesis

Light $6CO_2 + 6H_2O \longrightarrow C_6H_{12}O_6 + 6O_2$

Bio-Gas:- It consist of 55 to 75% methane,

CO_2 ----- >30-45%

Some other gases N_2, H_2, H_2S

Energy obtained from Biomass

i. Heat energy
ii. Methanol Ethanol

Gaseous fuel (bio gas cycle)

Application of Bio gas

i. It is used in house for using food purpose
ii. Lighting/ Electricity

iii. Running small engine or transport fuels

METHODS FOR OBTAINING ENERGY FROM BIO-MASS

Bio mass can be used directly as fuel or by converting into liquid or gaseous fuel.

These are following methods:-

i. Direct combustion method

ii. Thermal chemical conversion method

iii. Bio- chemical conversion method

1. DIRECT COMBUSTION METHOD

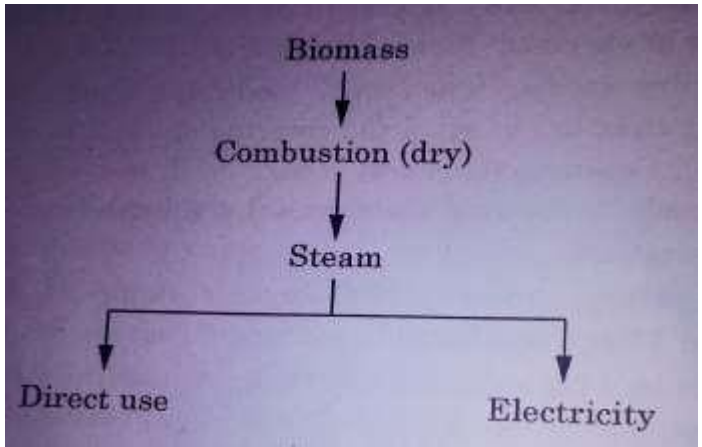

2. THERMAL CHEMICAL CONVERSION METHOD

Biomass+O2 ----- >CO+H2O+Heat

3. BIO- CHEMICAL CONVERSION METHOD

Bio conversion of bio mass into biogas is slow process and it is carried out in two ways

i. Anaerobic digestion

ii.Fermetation

GASIFIER

It is an equipment which convert biomass such as wood waste,agriculture waste,human waste, into biogas with high efficiency this performs the function of gasification.

GASIFICATION:-

It is a process that convert the carbonaceous material into CO,H2O,CO2.

Steps for gasification

1. DEHYDRATION PROCESS:- Carbonaceous material is derived under 100° C this process is called Dehydration process.

2. PYROLYSIS:-Carbonaceous material goes for pyrolysis process (at 300° C)char is obtained.

3. Char in presence of oxygen forms CO2 and also CO and H2 etc are produced.

ADVANTAGES OF GASIFIER:-

1. EASY MAINTENANCE
2. EASY TO OBTAIN
3. EASY TO CONSTRUCTION
4. BETTER RELIABLE

TYPES OF GASIFIER

1. Up drought gasifier

2. Down drought gasifier

3. Fluidised bed gasifier

1. UP DROUGHT GASIFIER

In this type of gasifier air enters from below the combustion chamber and synthetic gas leaves from the top of the gasifier.In this number of ash content left

1. UP DROUGHT GASIFIER

In this type of gasifier air enters from below the combustion chamber and synthetic gas leaves from the top of the gasifier.In this number of ash content left

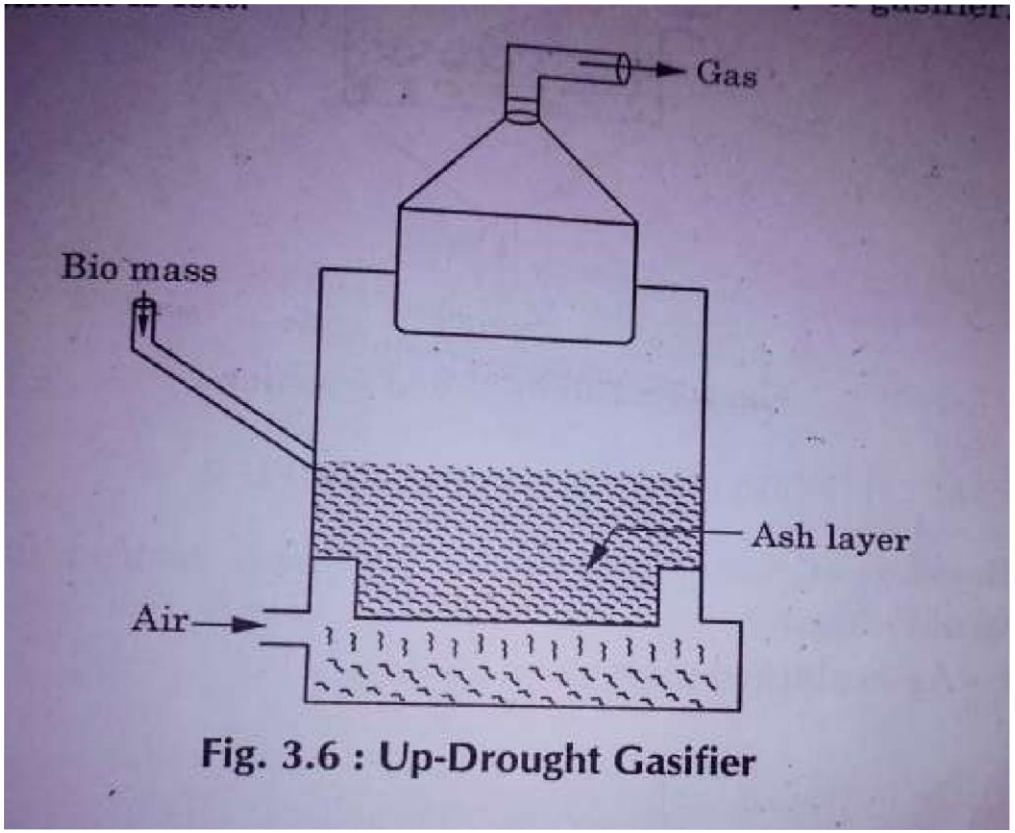

Fig. 3.6 : Up-Drought Gasifier

2. DOWN DROUGHT GASIFIER

In this type of gasifier air enter into the combustion chamber from the top and gas leavesat the bottom as shown in figure.

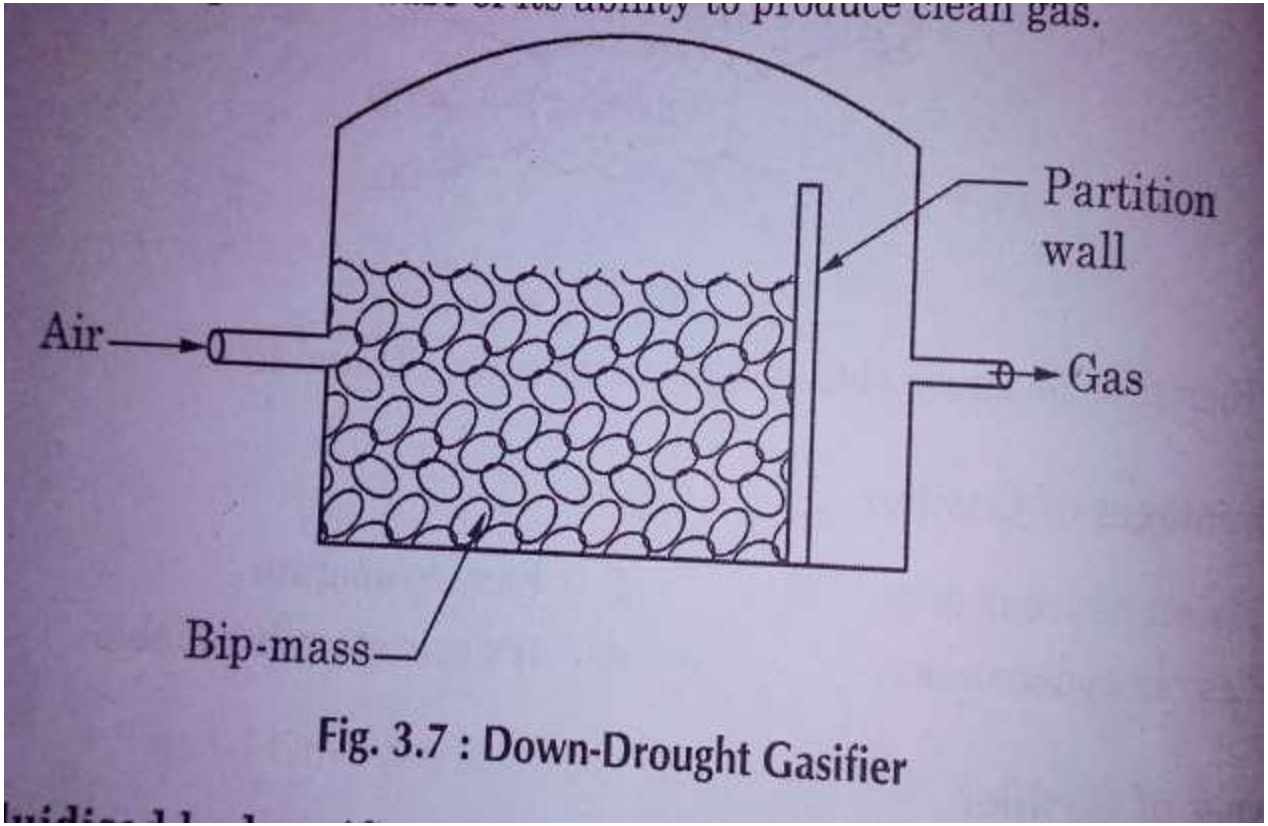

Fig. 3.7 : Down-Drought Gasifier

3. FLUIDISED BED GASIFIER

In this type of biomass is fed into a bed of hot inert particles such as sand which kept in fluidised state with air belowing verticle from bottom as shown in figure.Operating temperature is kept the range of

700° C to 1000° C.

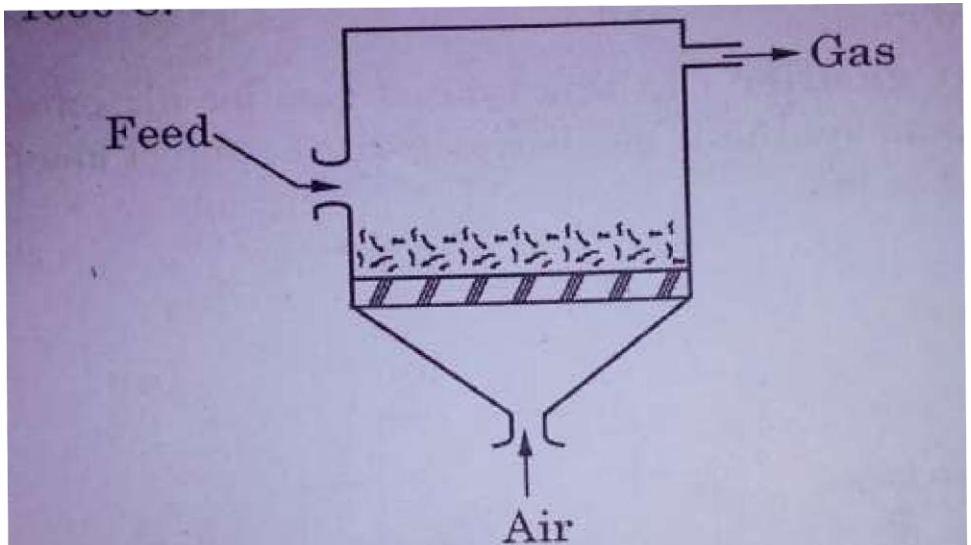

Fig. 3.7 : Fluidised Bed Gasifier

GENERATION OF POWER BY USING GASIFIER

The block diagram of power generation by using gasifier as shown. In figure below.

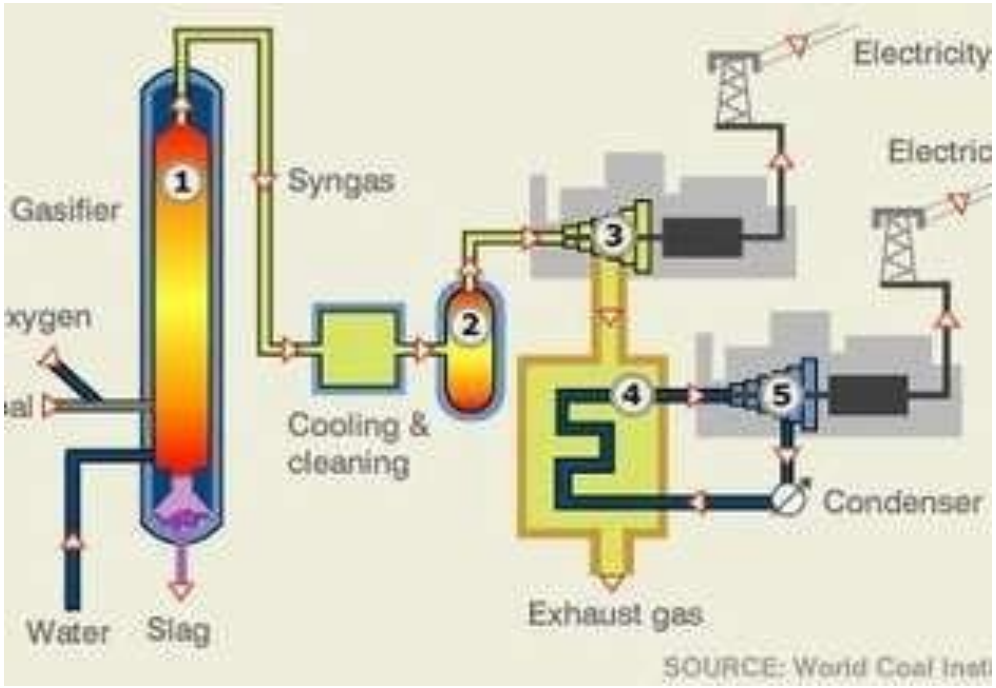

It consists:- 1. Gasifier

2. **Cylinder:-** synthetic gas is obtained from gasifier and it is cleaning before feeding to cylinder. After feeding the gas after it can be use to generate power as shown in figure.

Biogas Generator:- A generator that operate on bio mass instead liduid fuels.

Bio mass is obtained by mannure,sewage,agriculture waste,plants and cow dungs waste.

CHAPTER-4 WIND ENERGY

Wind:- Air in motion is called wind and energy obtained from wind is called wind energy.

Kinetic energy of wind is given by $E-1/2mv^2$

WIND ENERGY CONVERSION

Wind energy can be converted into electrical energy in wind plants.It generally referred as **WECS** stands for **wind energy conversion system.**

The main components of a wind power plant:

I. Wind turbine
II. Yaw
III. Coupler
IV. Hydraulic transmission

V. Electrcia generator

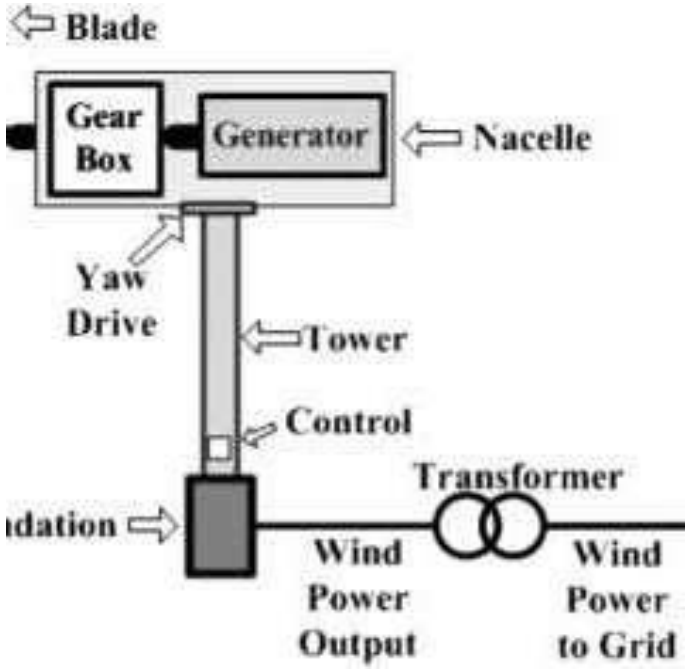

WIND MILLS

Wind mills or wind turbine is a machine which convert the kinetic energy of wind into rotary mechanical energy.

The wind energy work on the principle of momentum.

M=Mass $\times$ velocity

When wind blow strikes on the downward side of the blade with low pressure to cause pull blade and turn the rotor this is known as **lift force.**

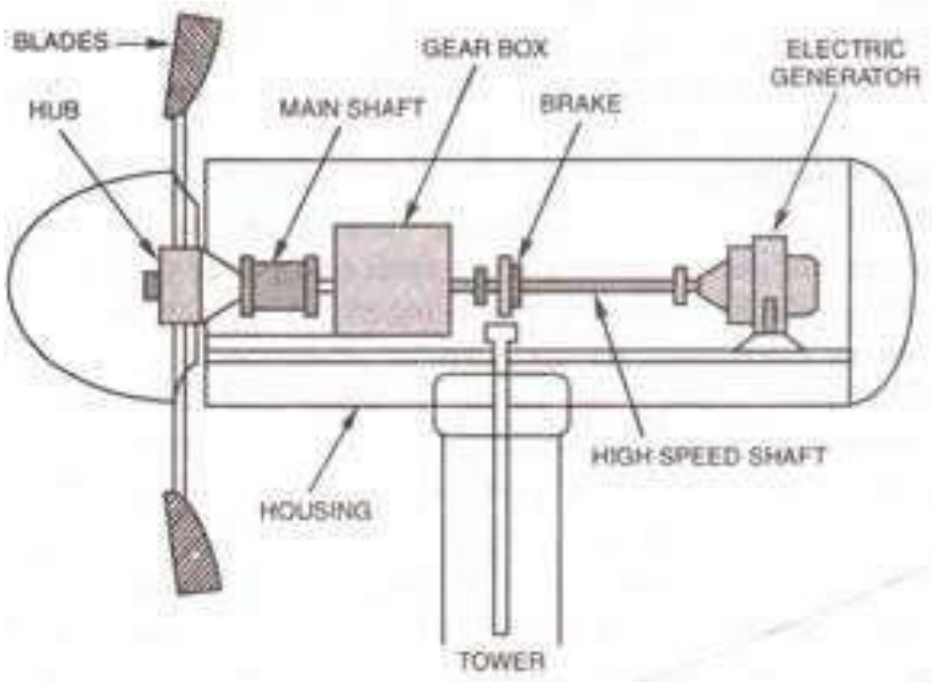

Fig. 7.39. *Wind Turbine*

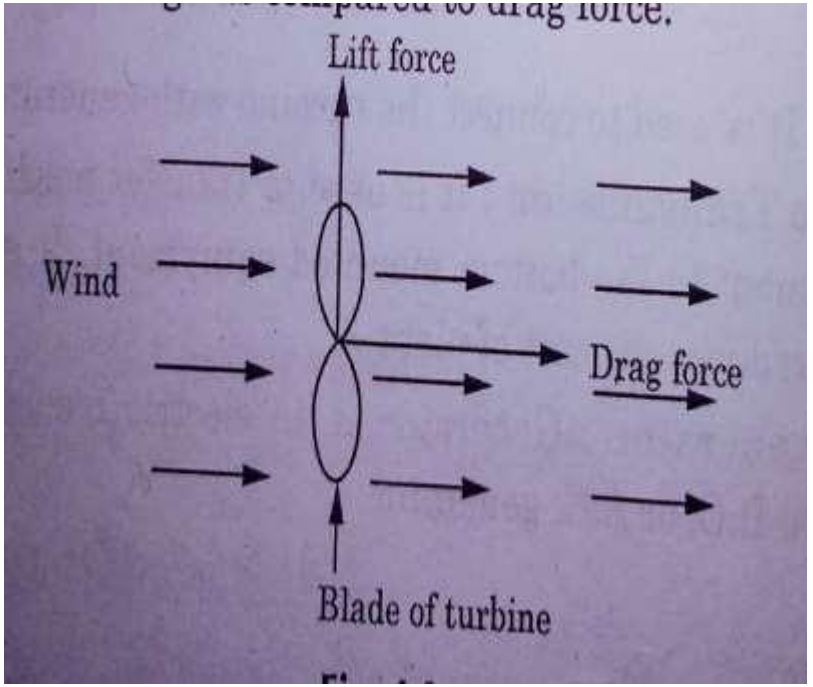

LIFT FORCE

TYPES OF WIND MILLS

1. HORIZONTAL AXIS WIND TURBINE

2. VERTICAL AXIS WIND TURBINE

1. Horizontal axis wind turbine

A turbine that rotate parallel to the direction of wind is called axis wind turbine.

Horizontal turbine consist of gear box,motor shaft and brake etc.

TYPES OF HORIZONTAL AXIS WIND TURBINE (HAWT)

1. SINGLE BLADE HORIZONTAL AXIS TURBINE

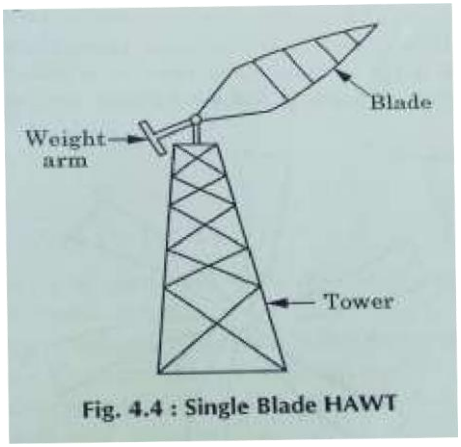

Fig. 4.4 : Single Blade HAWT

2. TWO BLADE HAWT

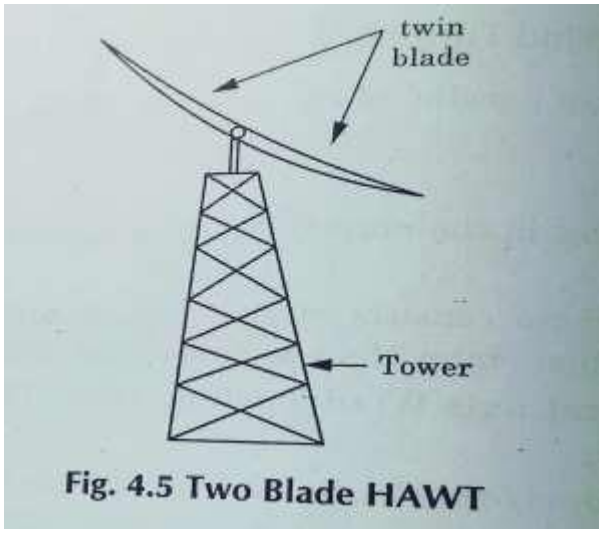

Fig. 4.5 Two Blade HAWT

3. MULTIBLADE HAWT

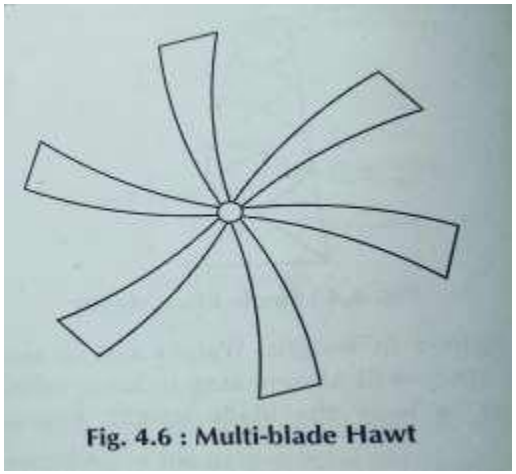

Fig. 4.6 : Multi-blade Hawt

Advantages of HAWT

i. It has high efficiency.

ii. It faces the maximum wind so that turbine collect maximum amount wind energy.

iii. In HAWT less vibrations occur.

VERTICLE AXIS WIND TURBINE (VAWT)

A turbine whose axis of rotation of blade is perpendicular to the direction of wind is called vertical axis wind turbine.

VERTICLE AXIS ARE TWO TYPES:

1. Savonius turbine

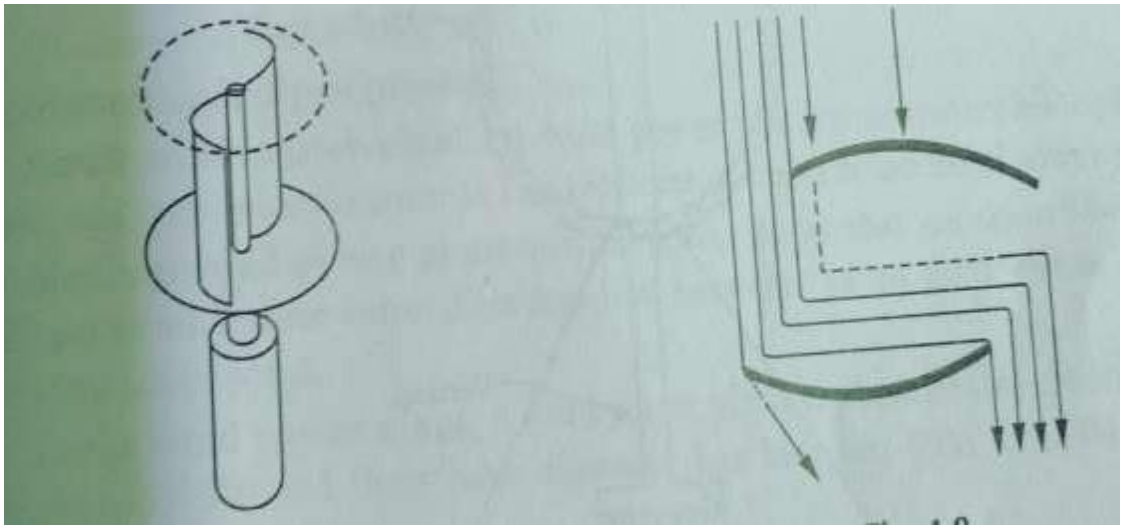

2. Darrieus type turbine

Advantages of VAWT

I. **VAWT** system has lower noise during operation.

II. It may be designed without any starting device.

III. Generator is kept on earth so it is easy to maintain.

ELECTRICITY GENERATION FROM WIND ENERGY

When wind stroke on turbine it will rotate and produce mechanical and mechanical energy is converted into electrical energy by using generator as shown in fig.

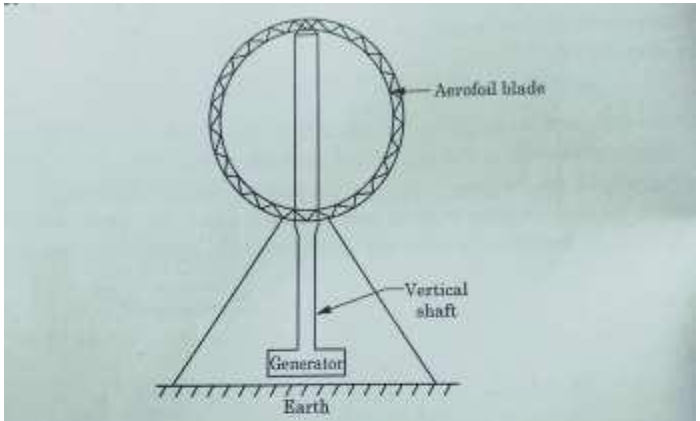

Fig. 4.9

Fig. 4.10

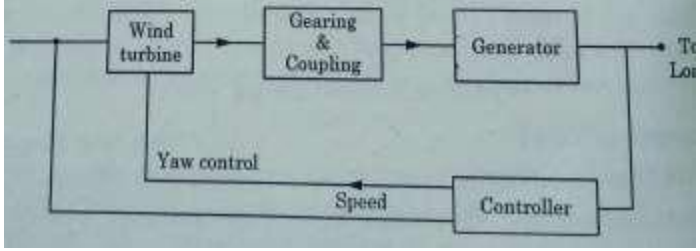

CLASSIFICATION OF WIND POWER PLANTS

1. AXIS OF ROTATION:

Horizontal Axis

Vertical Axis

2. SIZE OR CAPACITY OF PLANET:

a) small wind power plant

b) medium wind power plant

c) large wind power plant

3. ACCORDING TO POWER OUTPUT:

D.C.Wind power plant

A.C. wind power plant

4. ACCORDING TO SPEED:

Constant speed wind power plant

Variable speed wind power plant

5. ACCORDING TO UTILIZATION:

Directly connected to load

Battery storage

Grid connected system

Selection of site for a wind power plant

1. Plant must be away from city and forest area.

2. Plants are always installed in flat area because wind velocity is high in this area.

3. Cost of land for the site should be minimum as possible

ENERGY STORAGE

Wind turbine operation is not reliable at very high cost and very low speed.The power has low demand excess wind energy would be stored for use at other time

Wind energy can be stored by:-

1. Battery

2. Fly wheel

3. Compressed air storage

4. Hydro pump storage

CHAPTER-5 GEO-THERMAL AND TIDAL ENERGY

GEO-THERMAL ENERGY:- Energy present in the form of heat in the earth crust is called geo thermal energy. It is renewable source of energy because inner part of earth is and will continue to heat up.

VARIOUS GEO-THERMAL ENERGY

i. Hydro thermal convective system

ii. Geo pressure resources

iii. Hot dry rocks

iv. Magma resources

1. HYDRO THERMAL CONVECTIVE SYSTEM

The word Hydro is related to water and thermal is related to heat. In this system water is heated by its

Contact with hot rocks. Thickness of earth crust above

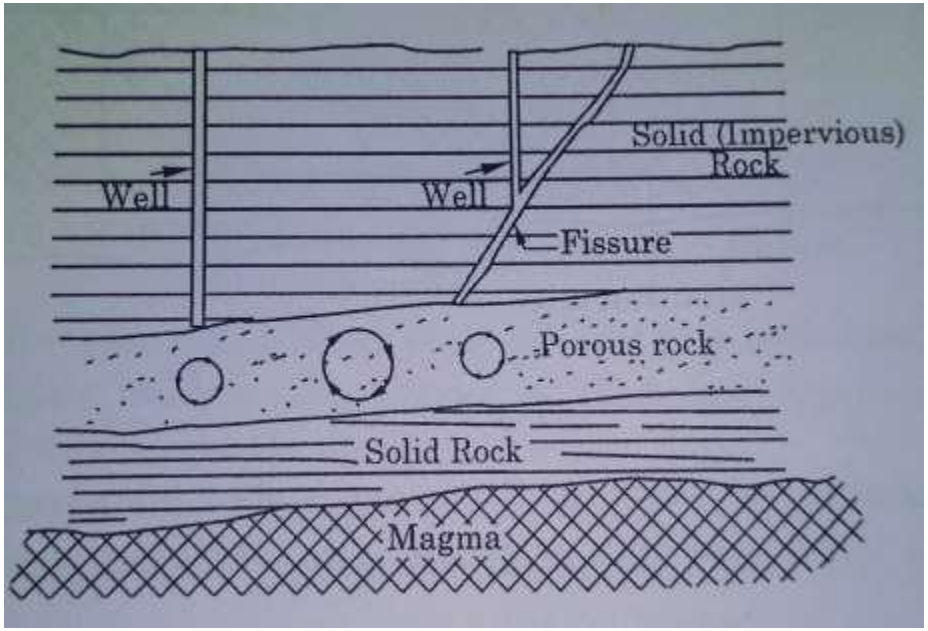

magma is 30km

Hydro thermal source are further sub divided into:

Vapour dominated system

Liquid dominated system

1. Vapour dominated system

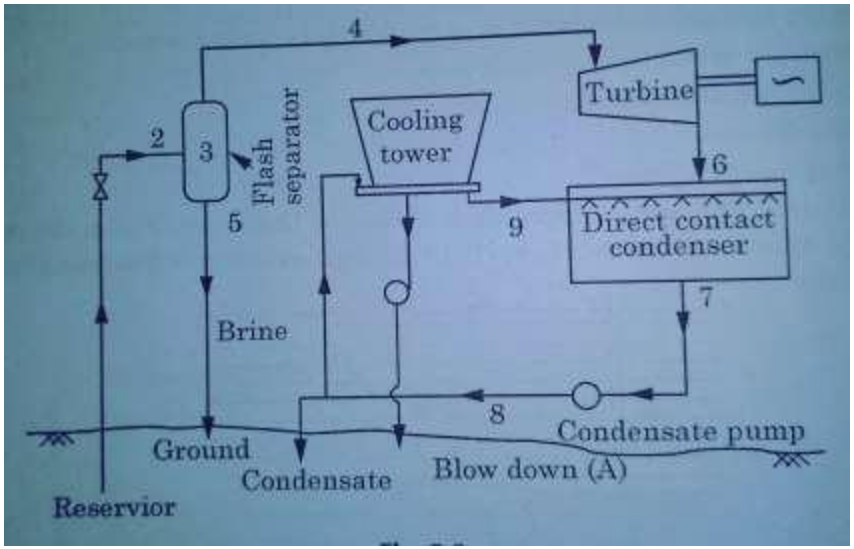

2. Liquid dominated system

i. Geo pressure system

ii. Petro thermals resources

iii. Magma resources

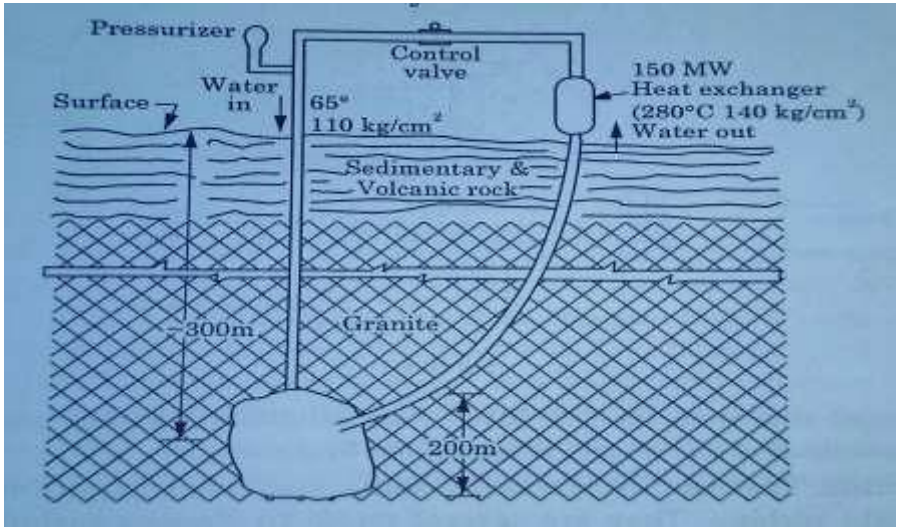

PRIME MOVER FOR GEO-THERMAL ENERGY CONERSIONS:-

Prime mover is also called turbine. A machine that convert the kinetic energy of steam into mechanical energy is called turbine or prime mover

Prime mover can be classified:

Impulse turbine

Reaction turbine

Impulse turbine :- It is an turbine the total pressure of steam converted into kinetic energy by nozzle.

The kinetic energy derives a wheel turbine

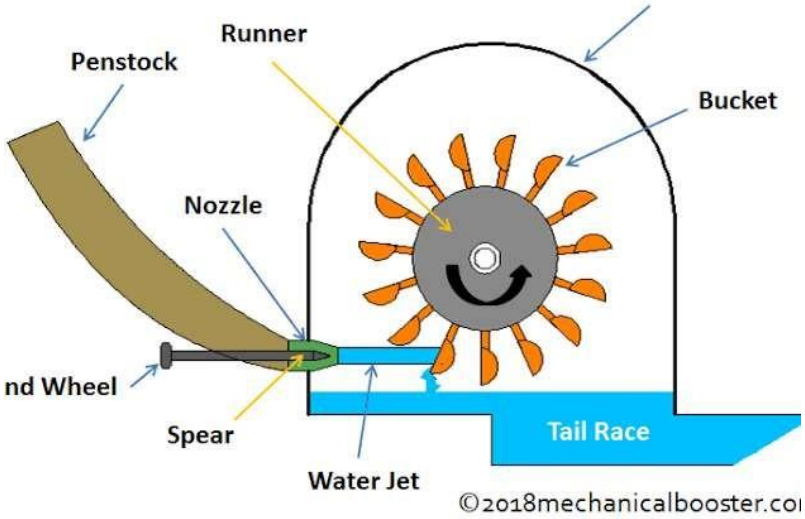

Reaction Turbine: In reaction turbine steam enter with partly pressure and velocity into turbine.

They are several types:-

Francis turbine

Kaplan turbine

POWER GENERATION BY GEO THERMAL RESOURCES:-

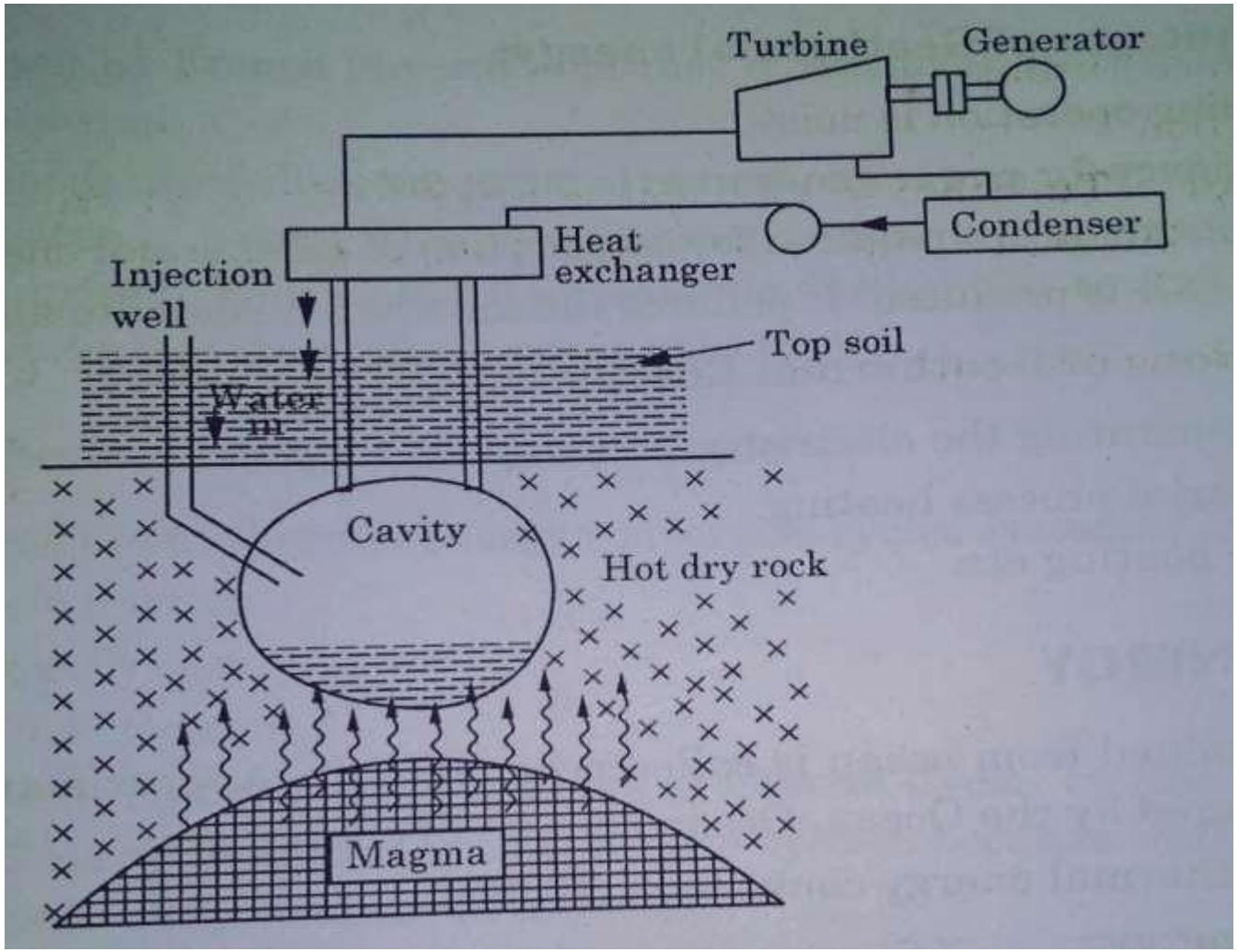

Advantage and disadvantages of GEO-THERMAL energy:-

Advantages:-

Small Maintenance Cost: ...

Brilliant Efficiency: ...

Highly Sustainable: ...

Increase in Employment: ...

Reduction in Noise Pollution: ...

It is More Reliable: ...

It Saves the Non-renewable Fossil Fuel Sources:

Disadvantages:-

1 Environmental Issues. There is an abundance of greenhouse gases below the surface of the earth, some of which mitigates towards the surface and into the atmosphere. ...

2 Surface Instability (Earthquakes) ...

3 Expensive. ...

4 Location Specific. ...

5 Sustainability Issues.

Application of GEO-THERMAL energy:

We can use the steam and hot water produced inside the earth to heat buildings or generate electricity. Geothermal energy is a renewable energy source because the water is replenished by rainfall and the heat is continuously produced inside the earth.

Ocean Energy:-

Energy can be obtained from ocean is called ocean Energy.Approximately 70% area the earth is covered by the ocean. Ocean sources are:

1. Ocean thermal energy conversion
2. Tidal energy
3. Wave energy

OCEAN THERMAL ENRGY CONVERSION(OTES)

Solar energy is energy from the sun that is absorbed by the water of ocean according to Lambert law of absorption .It state that each layer of equal thickness of water absorbs the same fractions of light that passes through it. It was possessed by French physicists Jacques d arsonval.

OCEAN THERMAL ENERGY CONVERSION CYCLE

1. OPEN CYCLE SYSTEM

2. CLOSE CYCLE SYSTEM

3. HYBRID CYCLE SYSTE

1. Open cycle system

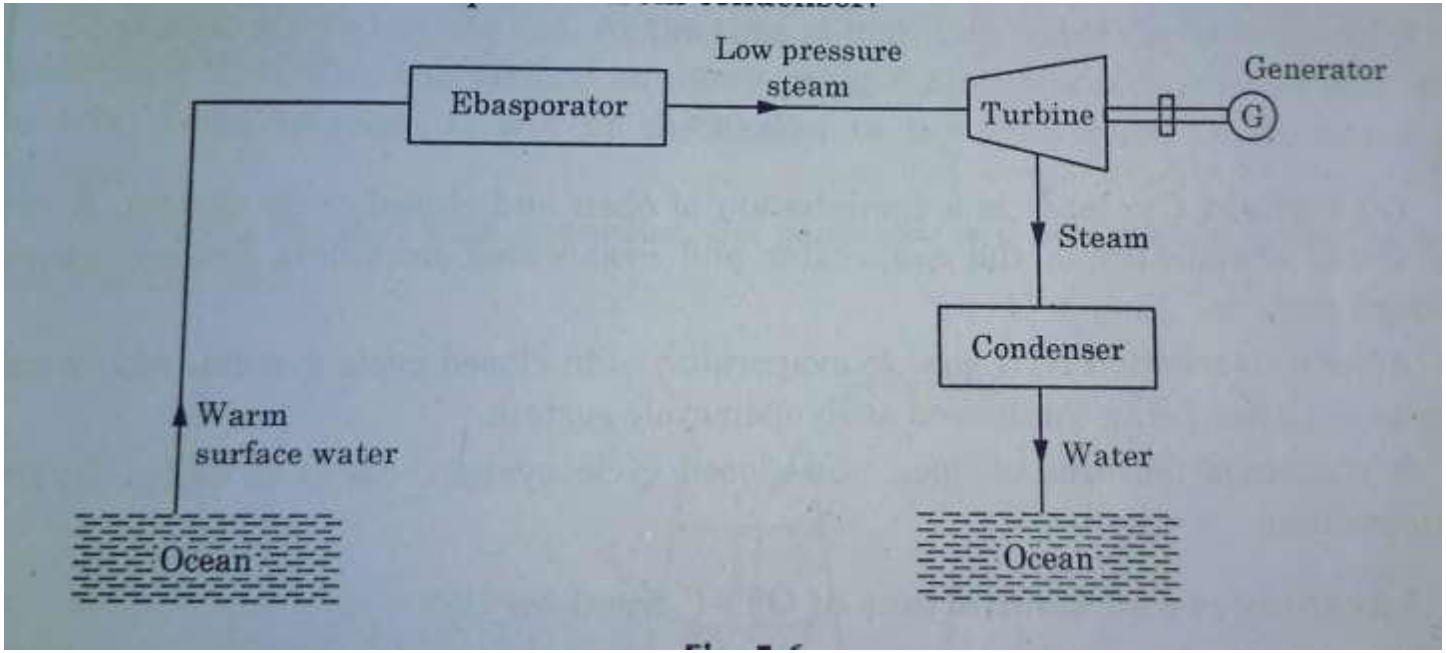

2. Closed cycle system

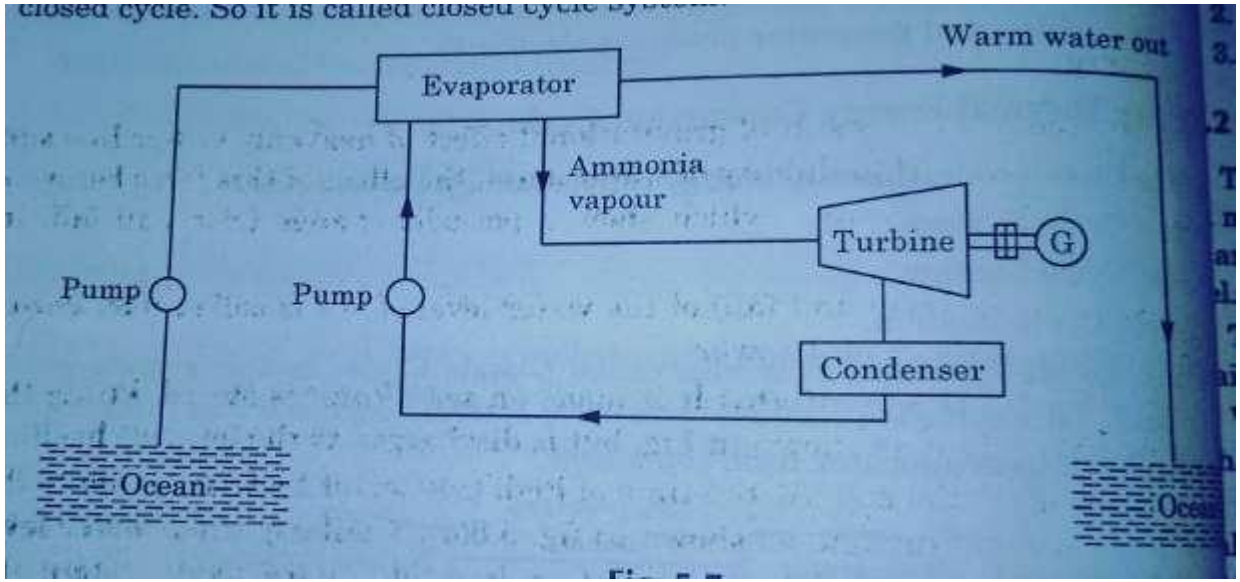

3. Hybrid cycle

It is a combination of closed cycle and open cycle system. Warm sea water evaporated in the evaporator ammonia pass through turbine.

Advantages and limitations of OTES system:

It is renewable sources of energy

No fuel is used

OTES systems more economical

But OTES some limitations

Steam has low pressure so large size of turbine required

Less efficiently

Overall cost is high

Application of OTES

Chemical treatment plant

For electricity generation

Hydrogen production by means of electrolysis

TIDAL ENERGY

Tides in the sea are the result of gravitational effect of heavenly bodies like sun and moon on the earth.Due to fluidity of water mass the effect of this forces becomes apperant in the motion of water which slow a periodic change in level.

Working of Tidal power plant:

A.

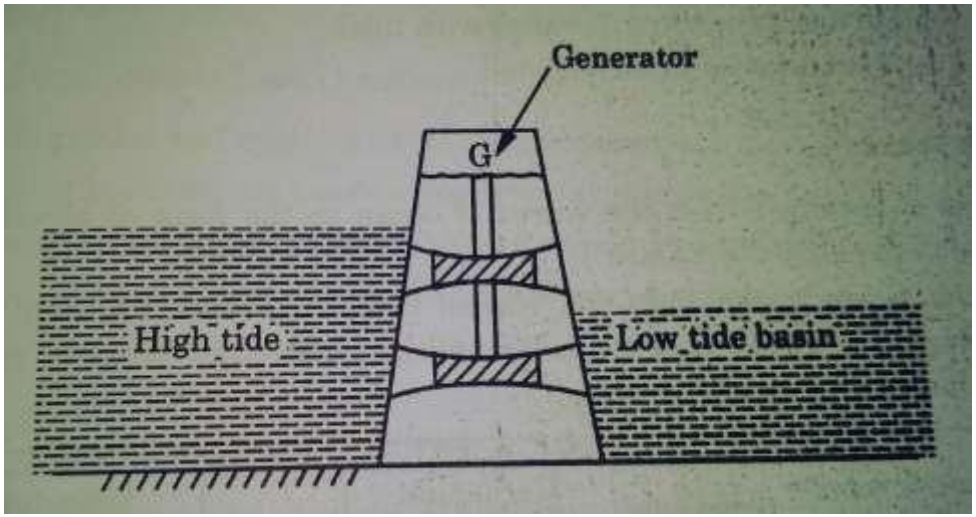

B.

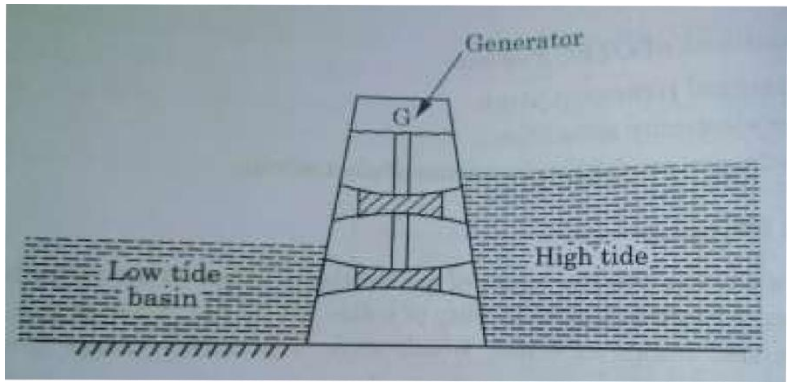

Advantage of Tidal energy

Free from pollution

Free mood of nature

Free from disturbing the eco system

Limitations of Tidal energy:

High initial cost

Sea water is corrosive

Output is not constant it varies with tidal

SEA WAVES

Energy is obtained from waves of ocean in the form of kinetic energy depend upon the shape of wave.

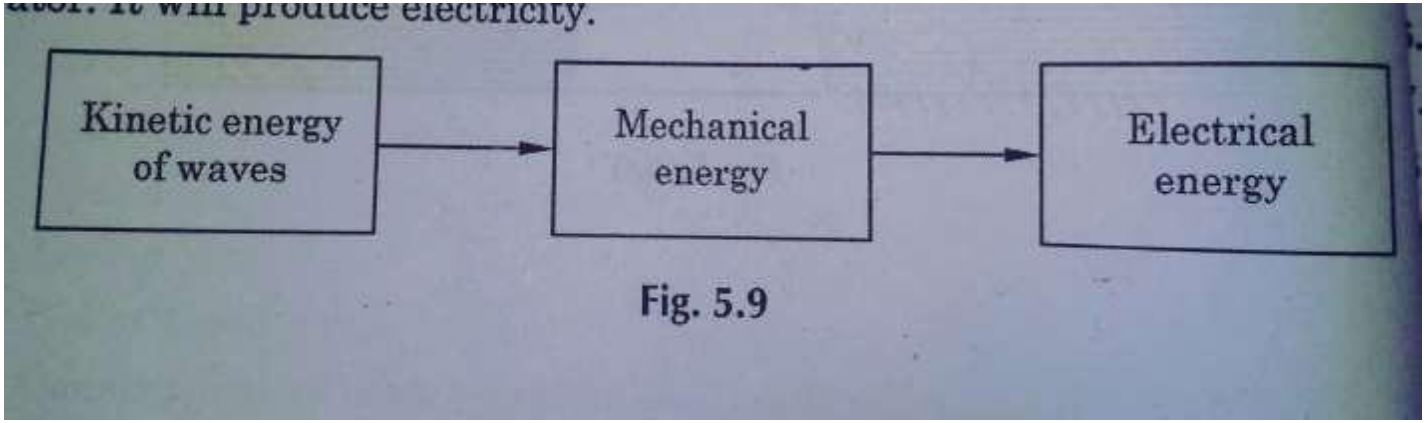

Fig. 5.9

CHAPTER-6. MAGNETO HYDRO DYNAMIC POWER GENERATION

Magneto hydro dynamic

Magneto hydro dynamic is a technique in which heat is directly converted into electricity. It is based on Faraday's law of electro magnetic induction. But it produces only DC power.

Working of MHD generator

It works an Faraday's law of electromagnetic induction when a magnetic field changes across a conductor an emf is induced in it which produce a electric current this is also the principle of generator.

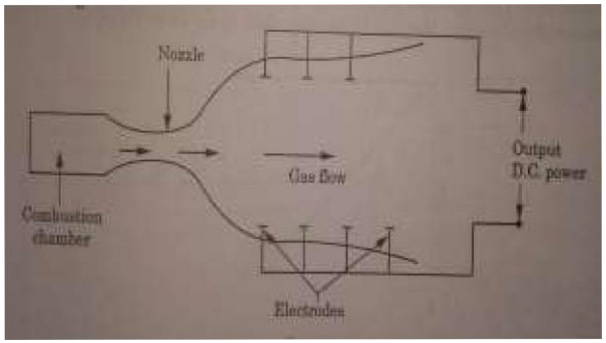
Nozzle
Gas flow
Output
D.C. power
Combustion
chamber
Electrodes

In shown in fig. In previous page combustion chamber heats up the substances like potassium or ceisum to become vaporised and is ionized at low temperature. Due to ionization of gas negatively charged makes the gas to conduct. Another way is to use liquid metal instead of gas. Hence conducting gas or liquid metal work as a fluid in a MHD.

When this conducting gas metal flow through magnet an emf is induced nozzle increase the velocity of fluid.
electrical equivent

Circuit of MHD given

This figure.

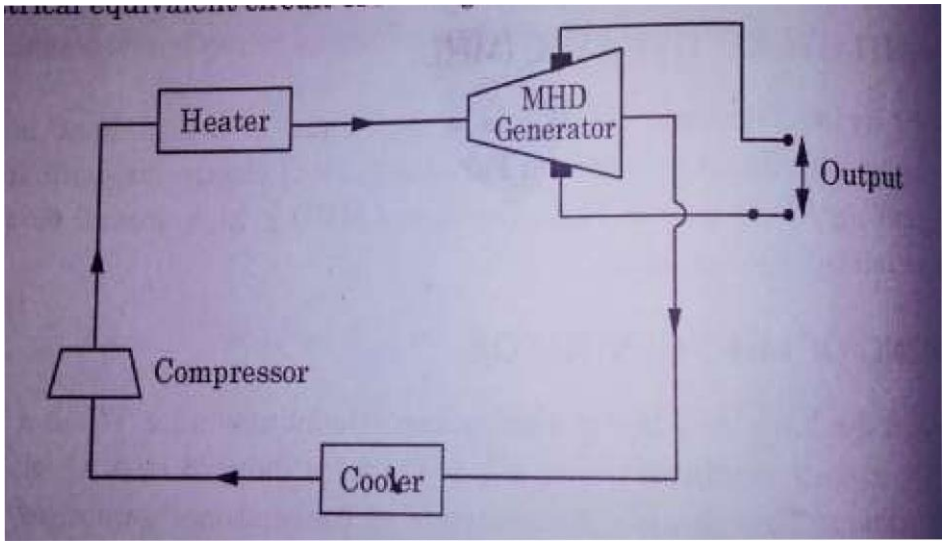

Advantages and disadvantages of MHD

Advantages:-

i. Efficiency of MHD generator is around 60%
ii. It generate large amount of power
iii. It is renewable source of energy

Disadvantages:-

i. There is problem of availability of conducting Gas or any other fluid.
ii. Difficult to fabricate MHD generator.

Types of MHD generation system.

1. Open cycle MHD power generation system
2. Closed cycle MHD power generation system

1. Open cycle MHD power generation system

Combustion chamber burns the fuel in presence of O2 at 1000° C. This hot and pressurized fluid ionize the gas. Then gas is passed through a nozzle

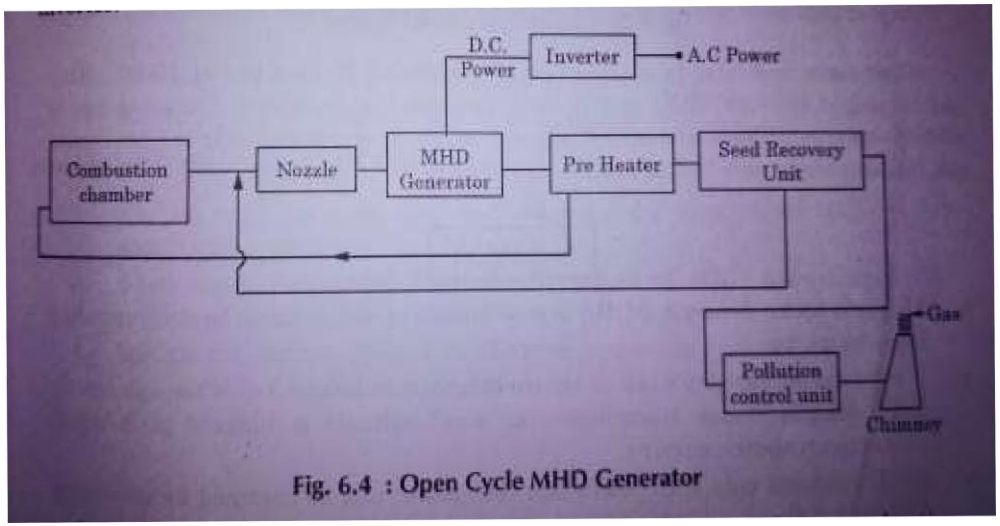

Fig. 6.4 : Open Cycle MHD Generator

to increase it's velocity.

2. Closed cycle power generation system.

In closed cycle MHD system conducting fluid is used again and again to form a closed cycle instead of exhausting the fluid in atmosphere.

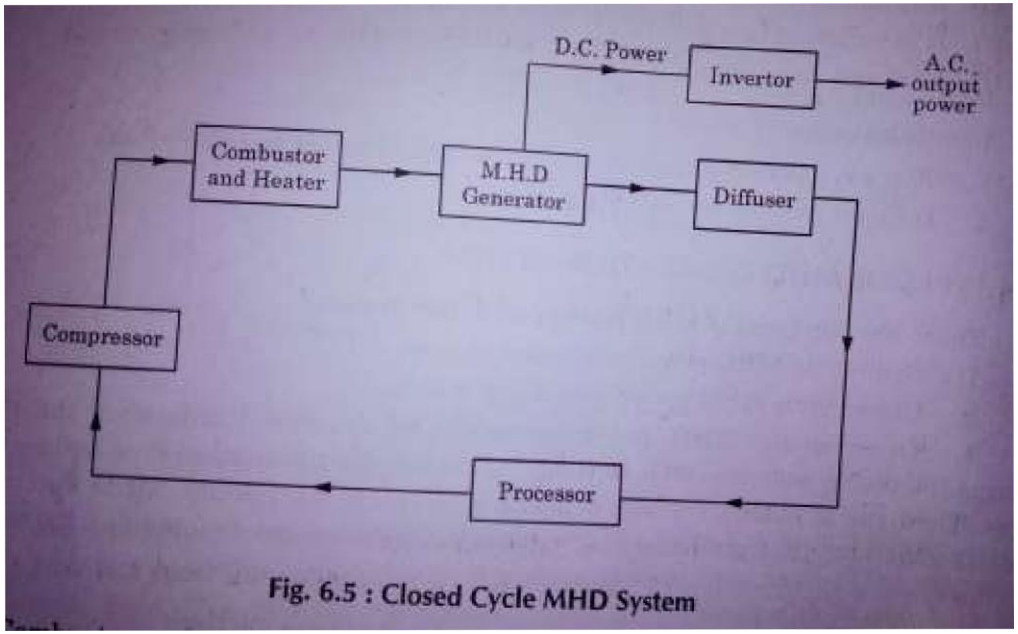

Fig. 6.5 : Closed Cycle MHD System

Combuster and heat is used to heat the argon or helium gas at 1900° C.This gas is slowed down by diffuser and cool into precooler.

CHAPTER-7 FUEL CELLS

Fuel cell

Fuel cell is a cell that convert the chemical energy into electrical energy directly without any combustion.

Types of fuel cells

i.Hydrogen oxygen fuel cell

ii.Hydrazine fuel cell

iii.Hydrocarbon fuel cell

iv.Direct methanol fuel cell

Design and operation principle of a fuel cells

1. Two porous metal electrode

2. An electrolyte

Platinum metal is used as electrode for military and space applications sometimes porous nickel electrode and porous carbon electrode are also used in fuel cells electrode.

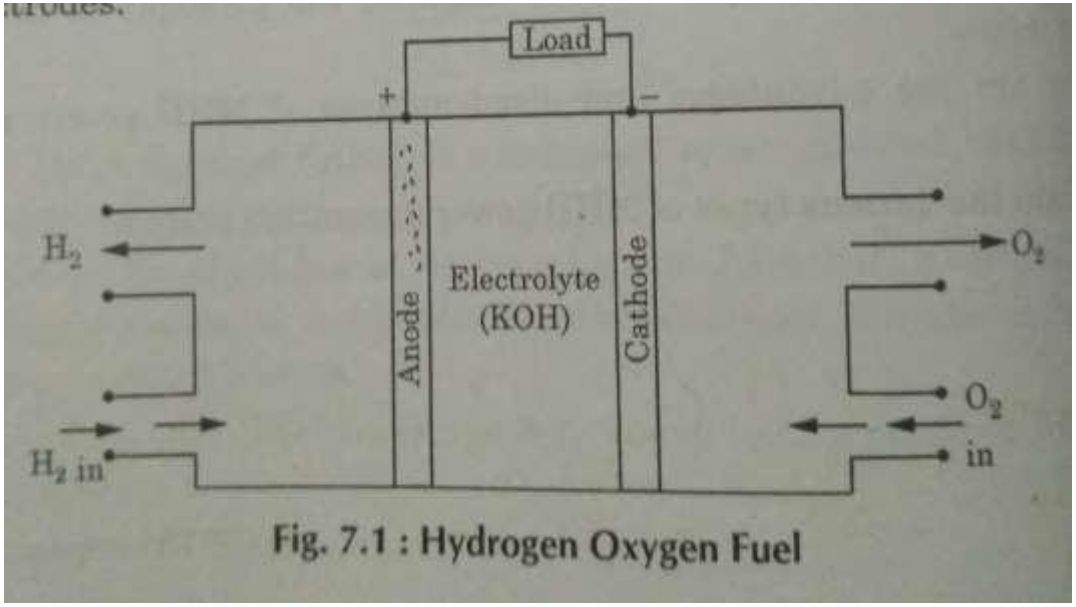

Fig. 7.1 : Hydrogen Oxygen Fuel

Operating principle:- Hydrogen gas is supplied to the anode electrode whereas oxygen gas is supplied to the cathode electrode. Then electro chemical reaction occur between electrode and electrolyte as follows.

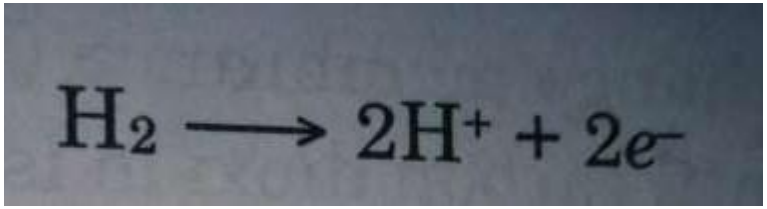

At anode

H2 molecules break into H+ ions at anode. These H+ ions combine with hydroxyl (OH-) ions to form water and produce electron at the anode.

2H+OH- --->H2O +e-

At cathode

Oxygen atoms combine with four electron and water to form hydroxyl ions.

O2+2H2O+4e--->4OH-

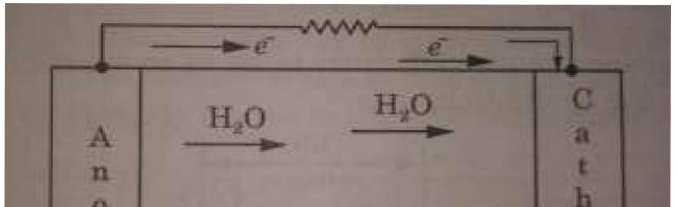

Hence emf will be developed between anode and cathode electrodes. When external load is applied across the electrode electrons will move toward cathode through external load.

Hence electron flow in a direction opposite to the direction of movement of electrons.

Direct Methanol Fuel cells

Direct method fuel cells or DFMC are the sub category of proton exchange fuel cell in which methanol is used as a fuel.

Construction and working

Direct methanol fuel is a cell that runs directly on methanol without having to first convert into hydrogen gas It consist two electrode separately by a proton exchange memberance.

At anode

$$CH_3OH + H_2O \longrightarrow 6H^+ + CO_2 + 6e^-$$

Water is consumed at the anode in the reaction and Hydrogen gas is produced. Similary oxygen enters at the cathode electrode and forms water.

At cathode

$$\frac{3}{2}O_2 + 6H^+ + 6e^- \longrightarrow 3H_2O$$

Overall reaction :

$$CH_3OH + \frac{3}{2}O_2 \longrightarrow 2H_2O + CO_2$$

It is easy to transport but it's efficiency is low as compared to other fuel cells. So, it is used for particular applications only.

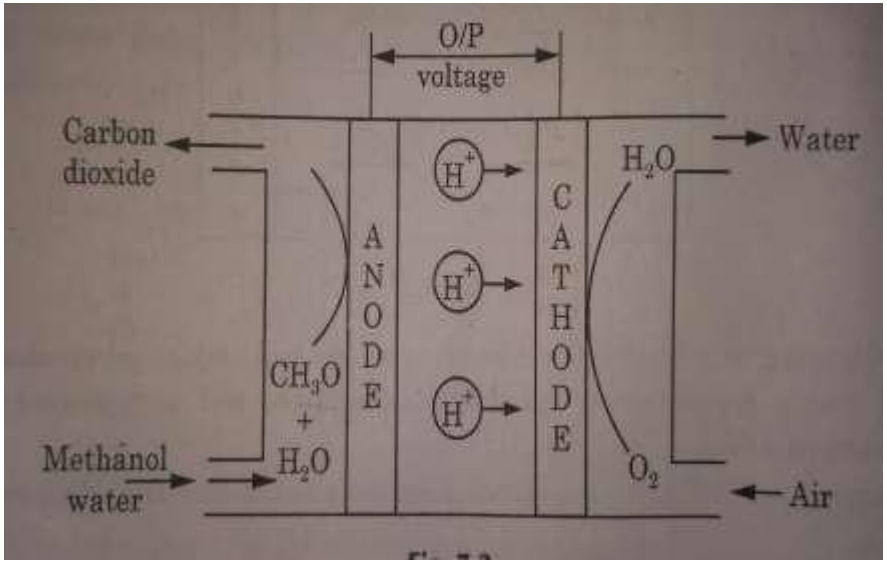

Hydrazine fuel cell

Hydrazine breaks down in the cell to form nitrogen and hydrogen which bonds with oxygen, releasing water. Hydrazine was used in fuel cells manufactured by Allis-Chalmers Corp., including some that provided electric power in space satellites in the 1960s.

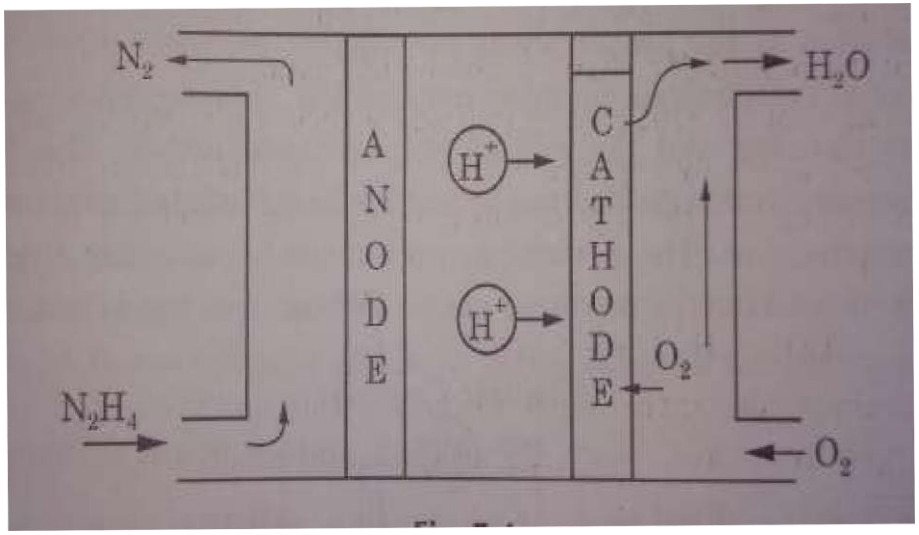

Hydrazine gas enters into fuel cells to react with anode and form the nitrogen while oxygen enters at cathode and form water

Hydrocarbonode cell

It is an organic compound consisting of hydrogen and carbon. In this type of cell hydrogen enters in the cell and react with anode. After reaction it form water and gives heat output

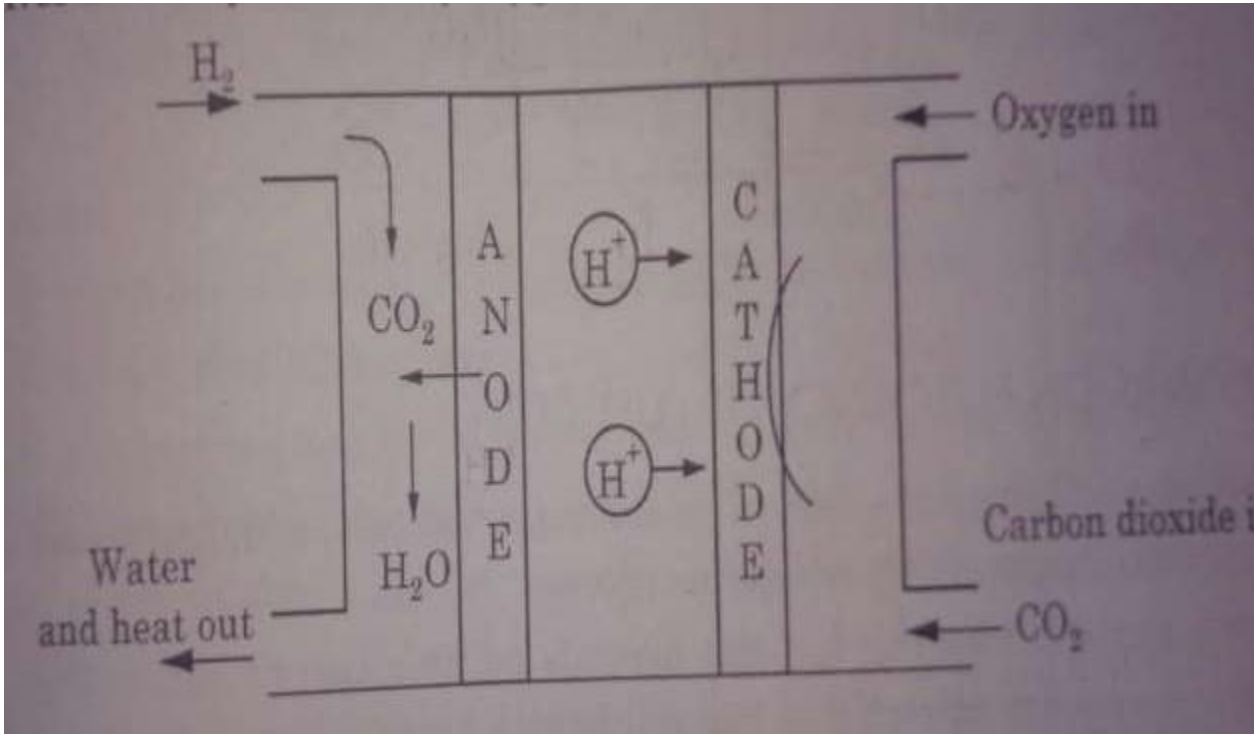

Hydrogen oxygen fuel cell

A hydrogen oxygen fuel cell that uses an electrolyte unit that is sealed and has protection from explosion and corrosion. It has a plate structure that produces maximum efficiency product toon and can adjusted.

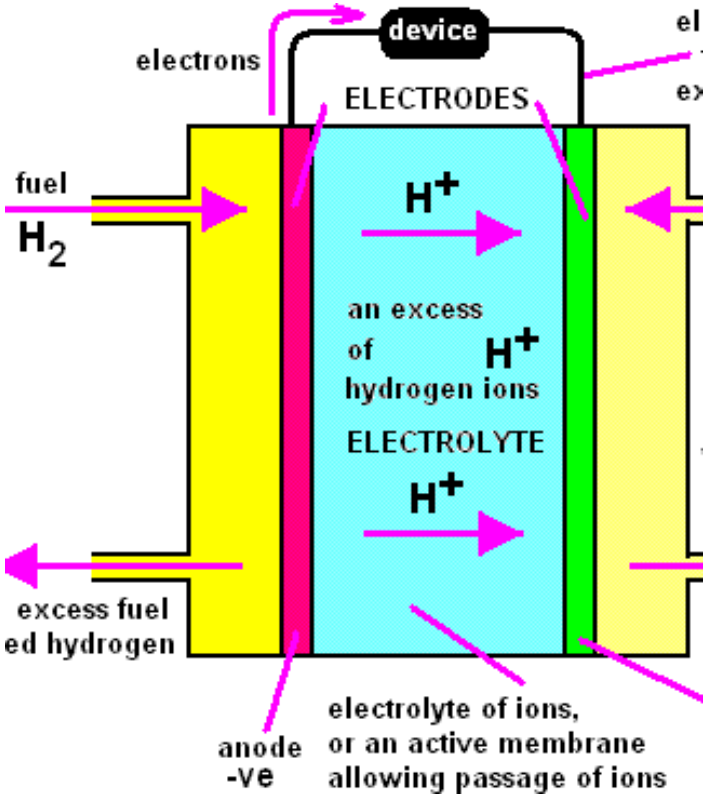

Conversion efficiency of fuel cells

Conversion efficiency of fuel cells is defined as the ration of output power to input power during the enegy conversion process.

Efficiency = output power/input power

The efficiency of fuel cells is 83%

Work output of a fuel cells

In a fuel cells a chemical relation take place whereby the reactants are converted into product in a steady flow process. It is noted that fuel air supplied to the fuel cell at nearly at atmospheric temperature and pressure. Also the product t of combustion leave at atmospheric pressure and may be cooled to the maximum useful work that can be obtained from a steady flow stream which undergoes a process at the beginning and end of which it is in pressure and temperature equilibrium with atmosphere.

From first law of thermodynamic for a steady flow process

$\Delta Q - \Delta W = \Delta H + \Delta(KE) + \Delta(PE)$

Cell voltage

Electrons generated at the site oxidation of cell are pushed toward the by an emf. This force is due to the difference in electric potential energy of an electron at two electrodes the quantity of electric work done on proportional to the number of electrons moved and the magnitude of the potential.

Work= Charge $\times$ potential energy difference

For water as a liquid E° = 1.23volts

For water as a gas E° = 1.18volts

This voltage of single cell practically fuel cells are interconnected assembly of such single cell into stacks to provide the desire voltage and power output

Fuel cell performance

1. Performance curve

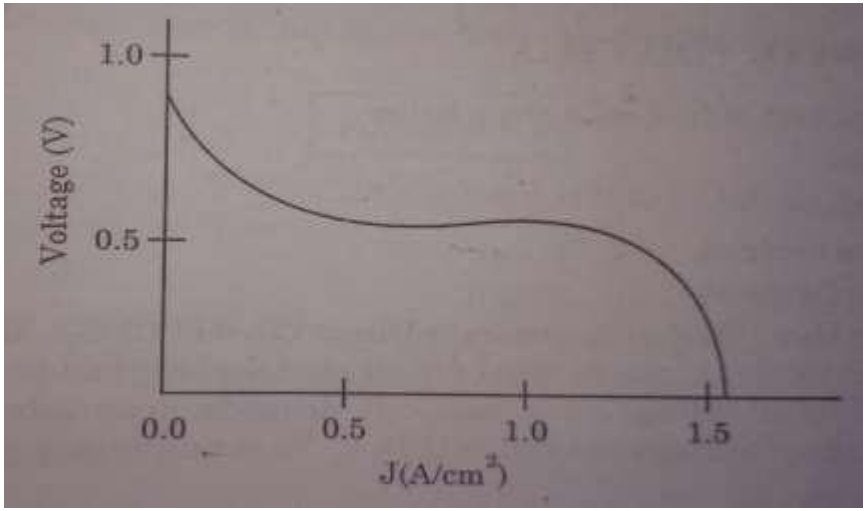

2. Power density

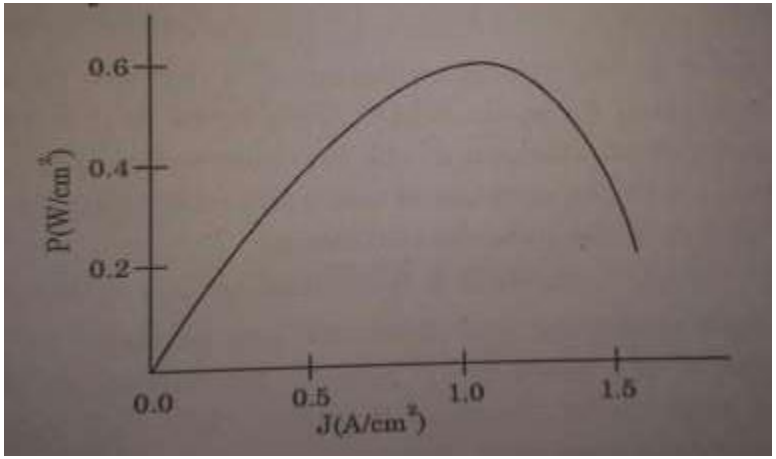

3. Efficiency

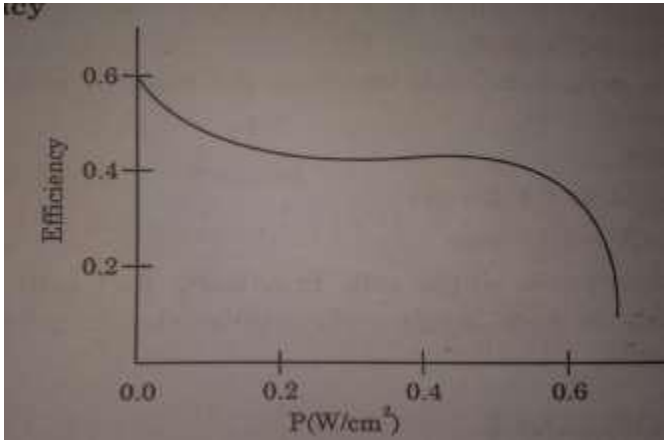

Application of fuel cells

Domestic use

Power stations

Automotive vehicles

Special applications

CHAPTER-8. HYDRO ENERGY- MINI AND MICRO HYDRO PLANTS

Micro hydro power (MHP)

A micro hydro power plant is a type hydro electric power scheme that produces upto 100 KW of electricity from such system is using a flowing steam or water flow. The electricity from such system is used to power up isolated homes or communication and is sometimes connected to the public grid.

In 1995 the micro hydro capacity in the world was estimated at 28 GW suppliying 115TWh

Of electricity. About 60% of this capacity was in the developed world with 40% in developing areas.

Advantages of micro hydro power(MHP)

Efficient energy sources: It takes only a small amount of flow to make it work to generate electricity with the micro hydro the produced electricity can be used as far as a mile away from the production site.

i. Reliable electricity source
ii. No reservoir required
iii. Cost effective energy solution.
iv. Power for developing countries
v. Integrate with the local power grid
vi. Environmental impact

Disadvantage

i.Suitable site characteristics required:

ii. Energy expansion not possible

iii.Low power in the summer months

iv.Environmental impact

Application

Power produced from a small hydro station can be used for various proposes;

1. **Productive uses:** this is where the electricity is generated is used to perform activities where money is exchanged for a services. Most of this secenarios take place in small business.

2. **Consumptive use:** All the other used the electricity can be used for are called consumptive load. They included using the electricity at the household or close to the house hold.

	Mechanic	Electricity
Productive use	I. Agro processing II. Timber sawing III. Textile fabrication IV. Cooling V. Drying	I. Heating II. Lighting III. Fertilizer production
Consumptive use		i. Domestic lighting ii. Cooking iii. Cooling iv. Radio and television

Mini Hydro Plants

A mini hydroelectric plant does not always require tall waterfalls and large quantities of water.

In addition of water drop plants there can also be some small running water hydroelectric plants which exploit the flow of water instead of the power generated from the drop.

Composition of a Mini Hydroelectric plant

i. Intake works
ii. Filtering works
iii. Conveying works
iv. Restitution works

EEDD –1

Electrical Symbol

electrical circuits.

Sr. No.	Description	Symbol	Function
	LIGHTING AND WIRING ACCESSORIES :		
1.	Main Switch "Lighting"	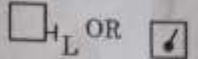	On/off the main supply (For Light/Fan Load)
2.	Main switch "Power"	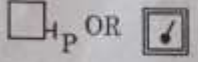	On/off the main supply (For Power Load)
3.	Distribution fuse board without switches (Lighting)		Distribution of electricity into sub-circuit (Light Load)
4.	Distribution fuse board without switches (Power)		Distribution of electricity into sub circuit (Power Load)
5.	Distribution fuse board with switches (L)		Distribution of electricity into sub circuit (Light Load)
6.	Distribution fuse board with switches (P)		Distribution of electricity into sub circuit (Power Load)

Electrical Symbol

Sr. No.	Description	Symbol	Function
7.	Double pole iron clad (D.P.I.C)		These are types of main Switch
8.	Triple pole iron clad (T.P.I.C.)		
9.	Fuse or Rewireable fuse		Protect the equipments from sh circuit, overload etc.
10.	Cartidge fuse/HRC Fuse		Type of fuse
11.	Neutral Link		Provide tapping in neutral wire.
12.	Miniature Circuit Breaker (MCB)		Protect the equipment from sh circuit & over load only
13.	Double pole MCB		
14.	Triple pole MCB	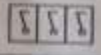	
15.	Four pole or triple pole with neutral MCB	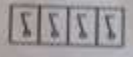	
16.	Wire		Used for passing the current.
17.	Wires joined	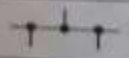	Joint in two wires
18.	Wires Crossing		Cross over wire
19.	Wires over wall surface	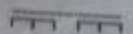	Over head wiring
20.	Wires under wall surface	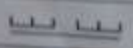	Underground wiring

Electrical Symbol

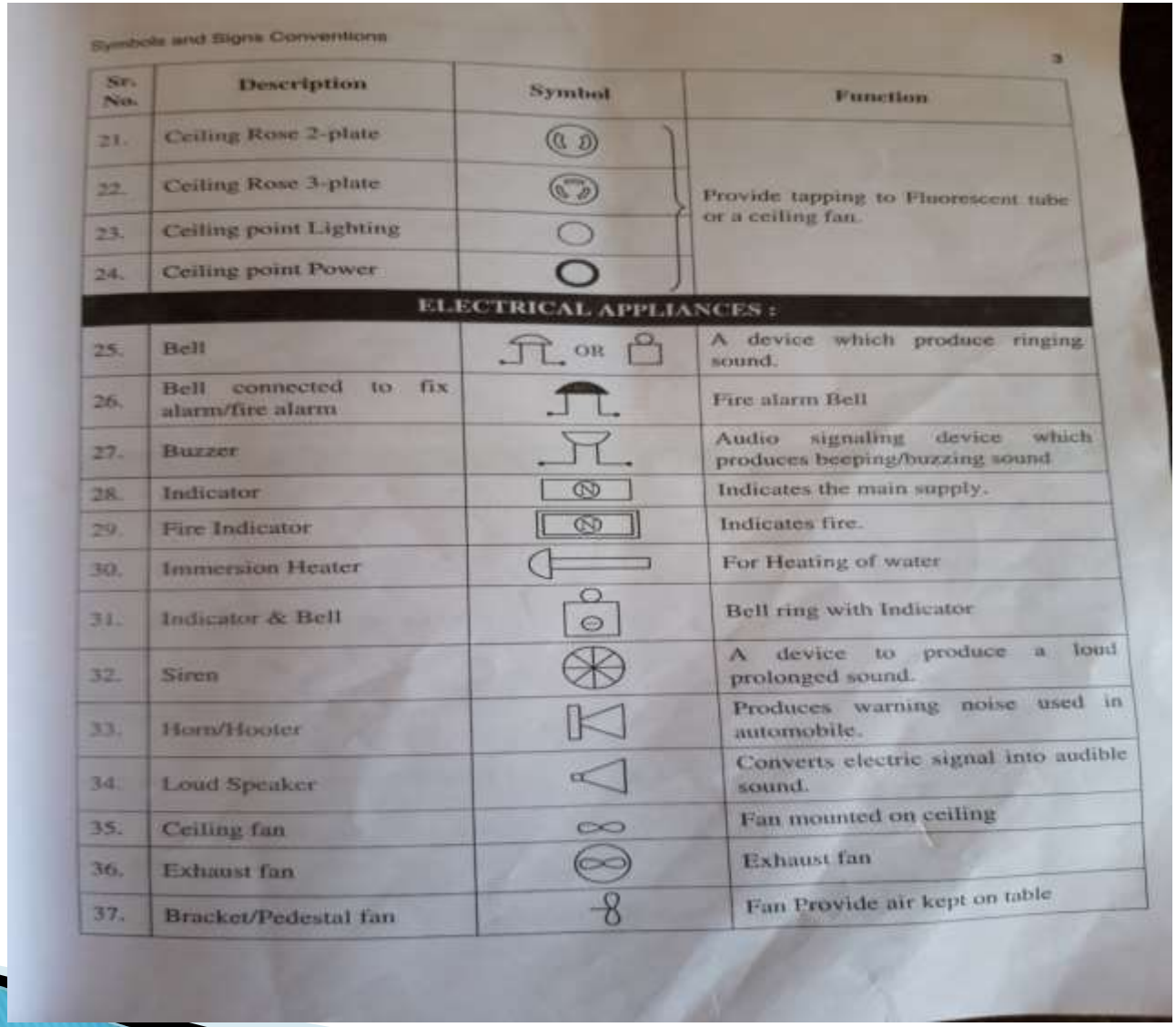

Symbols and Signs Conventions 3

Sr. No.	Description	Symbol	Function
21.	Ceiling Rose 2-plate		Provide tapping to Fluorescent tube or a ceiling fan.
22.	Ceiling Rose 3-plate		
23.	Ceiling point Lighting		
24.	Ceiling point Power		
	ELECTRICAL APPLIANCES :		
25.	Bell	OR	A device which produce ringing sound.
26.	Bell connected to fix alarm/fire alarm		Fire alarm Bell
27.	Buzzer		Audio signaling device which produces beeping/buzzing sound
28.	Indicator		Indicates the main supply.
29.	Fire Indicator		Indicates fire.
30.	Immersion Heater		For Heating of water
31.	Indicator & Bell		Bell ring with Indicator
32.	Siren		A device to produce a loud prolonged sound.
33.	Horn/Hooter		Produces warning noise used in automobile.
34.	Loud Speaker		Converts electric signal into audible sound.
35.	Ceiling fan		Fan mounted on ceiling
36.	Exhaust fan		Exhaust fan
37.	Bracket/Pedestal fan		Fan Provide air kept on table

Electrical Symbol

Sr. No.	Description	Symbol	Function
38.	Lamp (Lighting)		A device that generates light. For vision purpose.
39.	Lamp (Indicator)		Generate light for Indication of supply
40.	Emergency Lamp		Lamp which glows in emergency.
41.	Discharge lamp	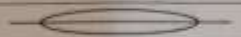	Generate light by discharging of gas.
42.	Fluorescent Tube		A Tube coated with fluorescent powder, also produces light
43.	Heater	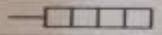	Provide Heating by using electricity
44.	Fan regulator		Regulate the fan speed.
45.	Fan point		Point of the fan connection
	SWITCHES :		
46.	Push button	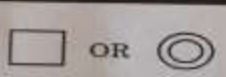	A switch "ON" when push it and "OFF" when, pressure released from it.
47.	Switch single pole	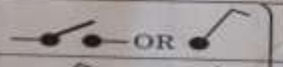	Used for ON/OFF a equipment.
48.	Switch Two pole		
49.	Switch Three pole		
50.	Two way switch		Used for passing a current in either two direction.
51.	Multi position switch		A switch operate at many positions.
52.	Intermediate Switch	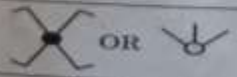	Also called four way switch.
53.	Emergency switch	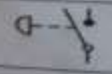	Switch used in emergency

Stair case wiring diagram

2.7.1 Staircase Wiring

Example 2.19. Draw the schematic, wiring and single line diagram for one lamp controlled by two switches (stair case circuit).

Solution.

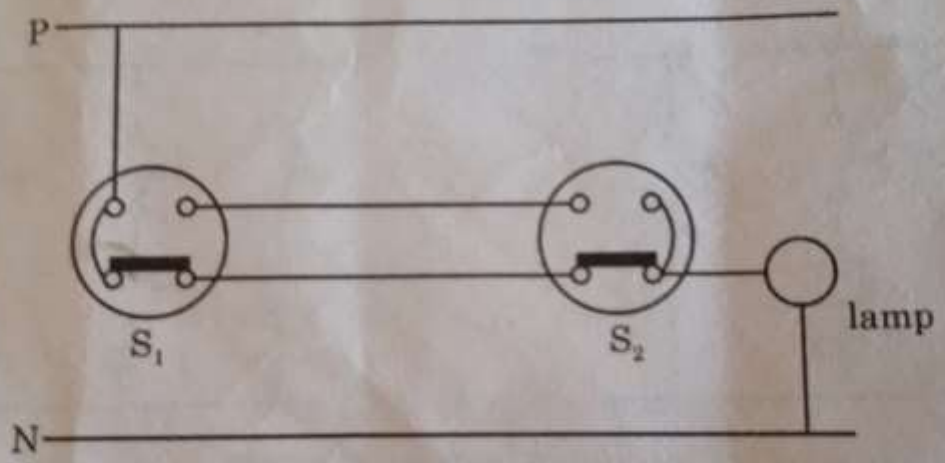

Fig. 2.60 : Schematic diagram

Continue...

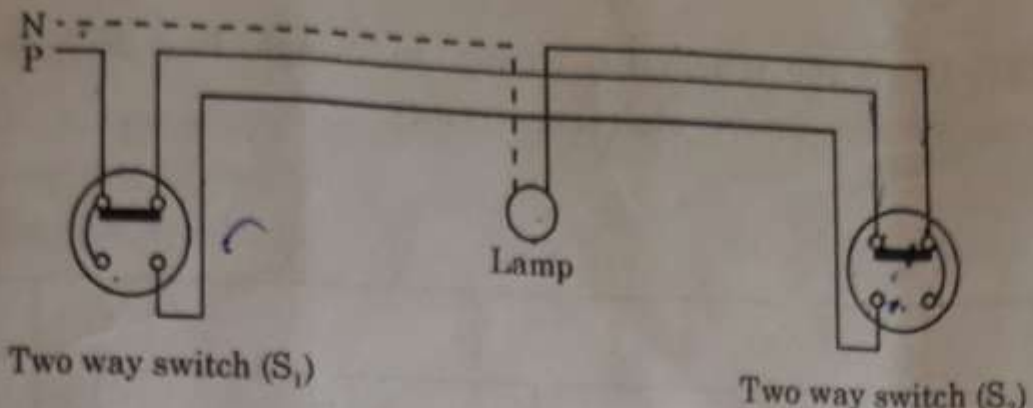

Fig. 2.61 : Wiring diagram

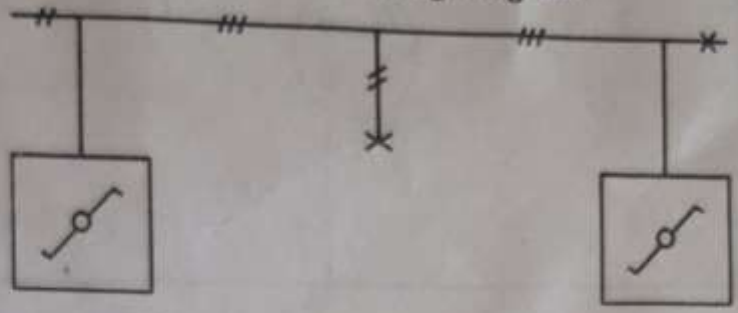

Fig. 2.62 : Single line diagram

Double Stair Case Wiring

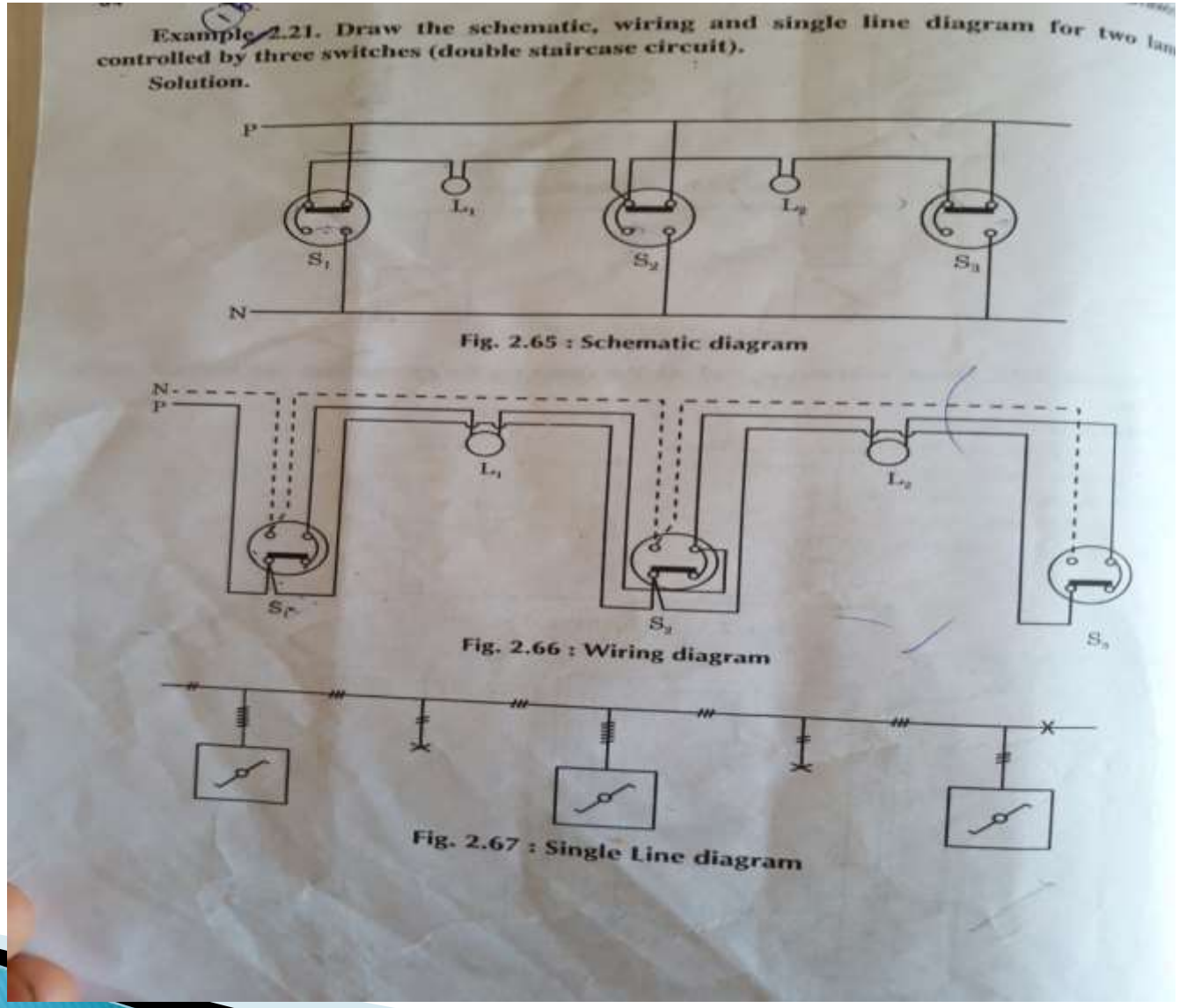

Example 2.21. Draw the schematic, wiring and single line diagram for two lam controlled by three switches (double staircase circuit).

Solution.

Fig. 2.65 : Schematic diagram

Fig. 2.66 : Wiring diagram

Fig. 2.67 : Single Line diagram

Googown Wiring

Wiring Diagram

2.7.2 Godown Wiring

In Godown wiring lamps are used to operate in sequential manner, *i.e.* one lamp operate at a time. This type of wiring is used in Godowns, long-passing, tunnel-like-structure etc.

In Godown wiring previous load will be turn off when we normally switch ON the next load.

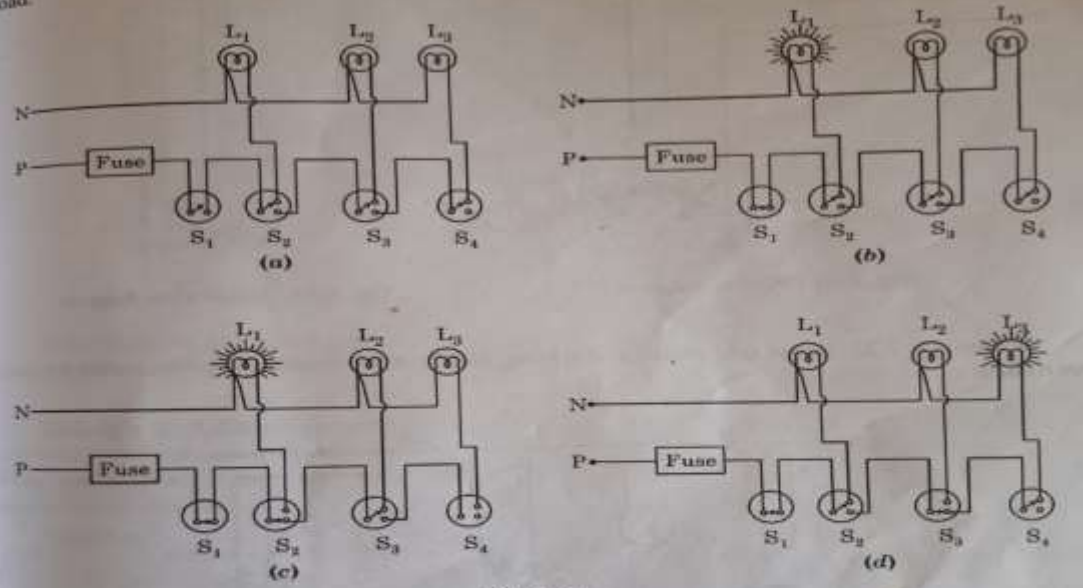

Fig. 2.68

Working: The phase has connected to the common pole of the first switch. Let us consider initially, common poles of all the switches are positioned to the 1st throw of the SPDT switch as shown is fig. (*a*). when switch S_1 is switched on then light L_1 glow as shown in fig. (*b*) changing the switch position of S_2 switch position to 2nd throw OFF's previous load and ON the next *i.e.* lamp L_2 as shown in figure (*c*). Similarly lamp L_3 can be turned on by pressing switch S_2.

Bus Bar Orthographic Projection

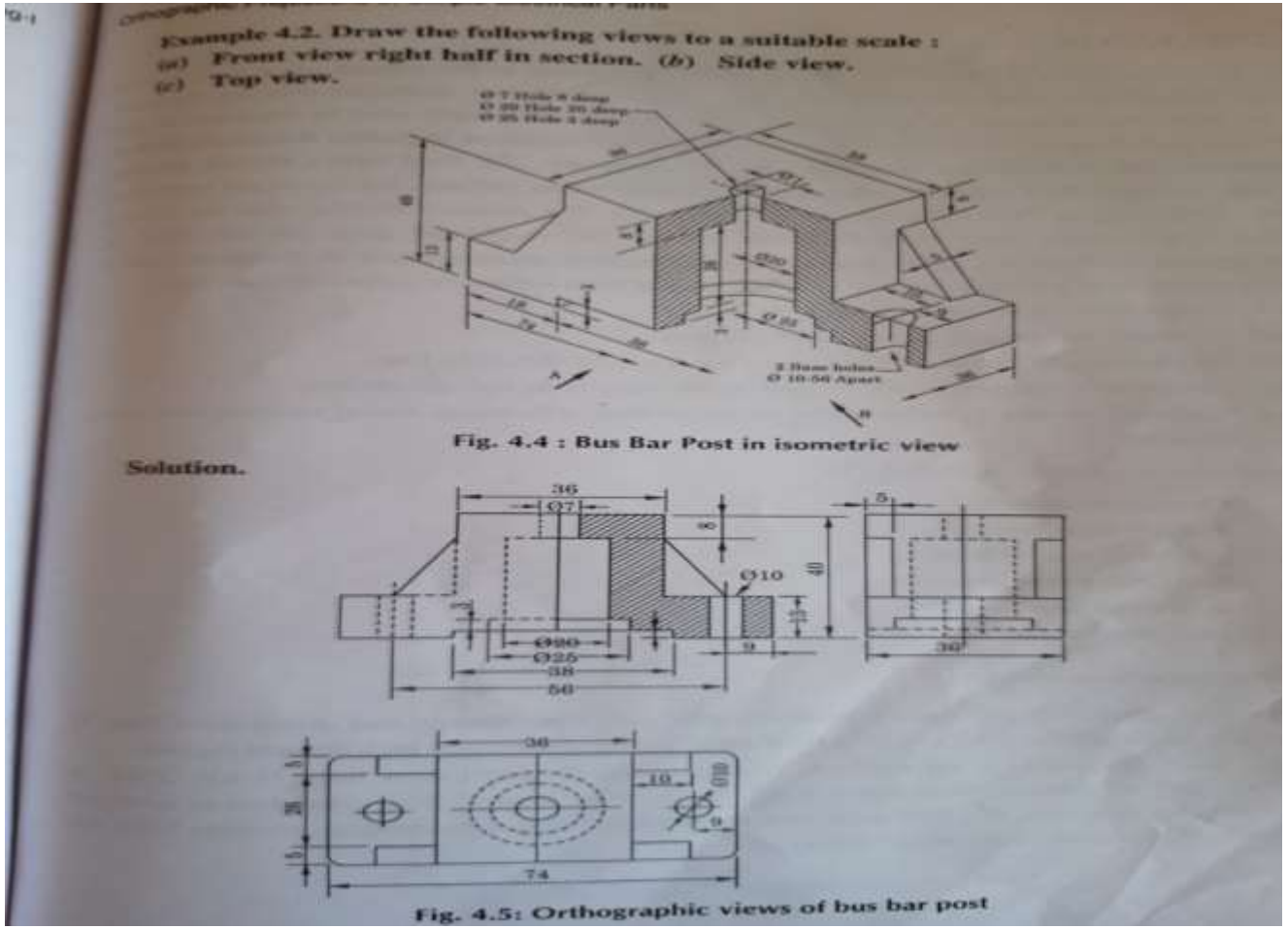

Example 4.2. Draw the following views to a suitable scale :
(a) Front view right half in section. (b) Side view.
(c) Top view.

Fig. 4.4 : Bus Bar Post in isometric view

Solution.

Fig. 4.5: Orthographic views of bus bar post

Bobbin of Small transformer

4.3 BOBBIN FOR A SMALL TRANSFORMER

Bobbins that are used for small transformer/choke is shown in fig. 4.17 below :

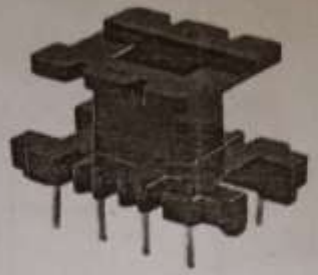

Fig. 4.17: Bobbin of small Transformer

These bobbins are normally made of plastic material. In some cases where the apparatu be operated at a higher voltage or current, two or more than two bobbins are connected to and their windings are connected in series. The bobbins are sometime made of magnetic ma The layers of windings that are wound on the bobbins are insulated from each other, whatev body of the bobbins is made of, (magnetic or non-magnetic material).

Transformers are mainly either 1ϕ type or 3ϕ type. These are used for stepping stepping down the voltage. Different types of transformers are used depending upon the ty applications. For *e.g.* in transmission of electrical power a step up transformer is used and i of distribution of electrical power a step down transformer of suitable turns ratio is depending upon the required output voltage. Transformers are used at very high voltage a high power rating in transmission times to very low voltage and power ratings like for cha battery of mobile phones/laptop/computers etc.

Transformers depending on the construction are of two types.

(*a*) Core type

(*b*) Shell type.

In core type transformers the winding surrounds the core where as in case of shell transformer core surrounds the windings.

The transformer whether it is core type or shell type is mounted on the limbs and div into sections. These individual sections are called **bobbin**.

the isometric view of Bobbin of small transformer. Draw

View of Squirrel Cage Induction Motor

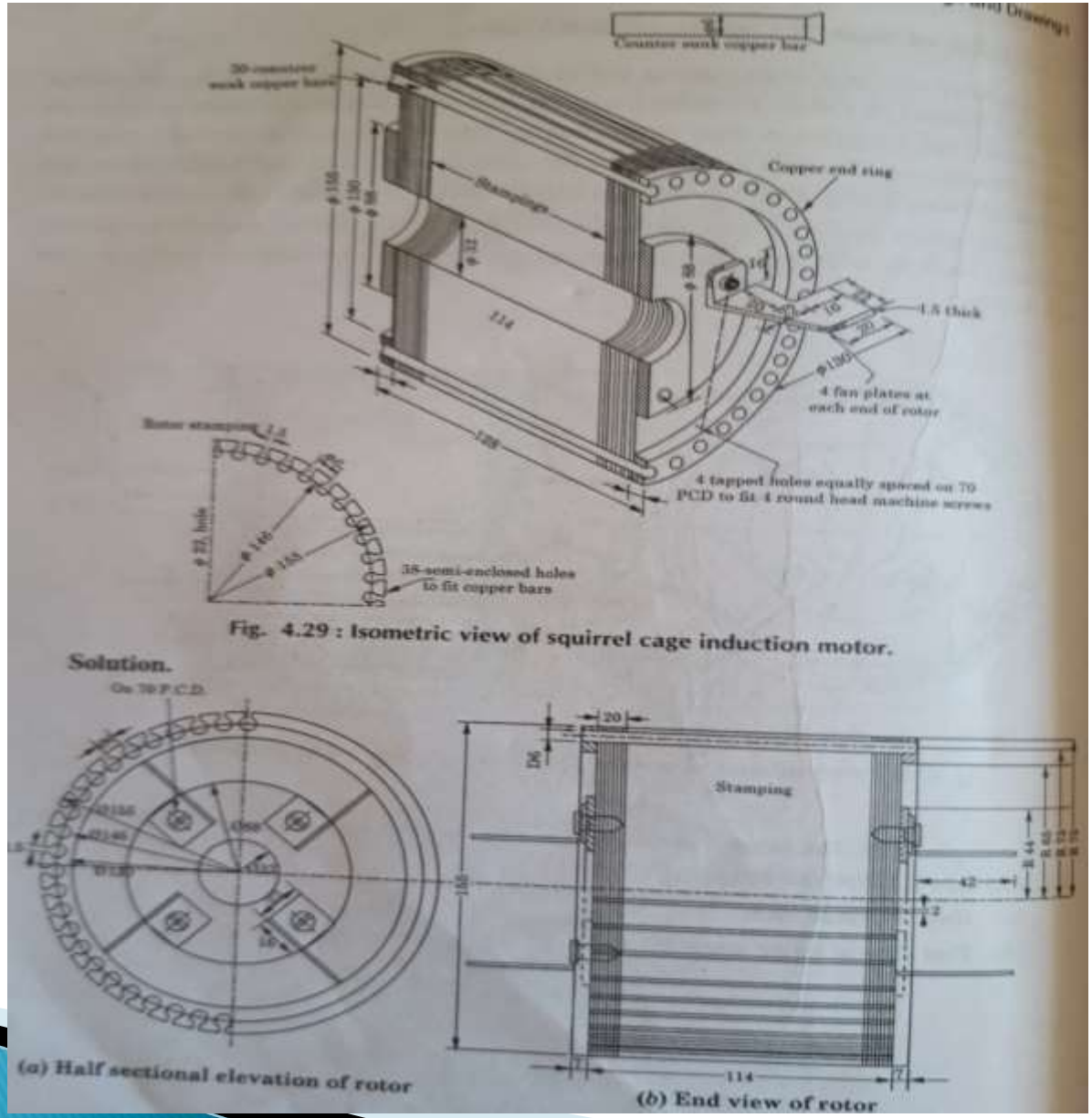

Fig. 4.29 : Isometric view of squirrel cage induction motor.

Distribution Board

Example 2.13. Draw the complete wiring diagram of a House showing energy meter, main switch, 2 distribution board. 6 subcircuit on one distribution board while 5 subcircuit on another distribution board and also showing the wiring of one fan, 4 lamp, one 6A socket connection one sub-circuit.

Solution.

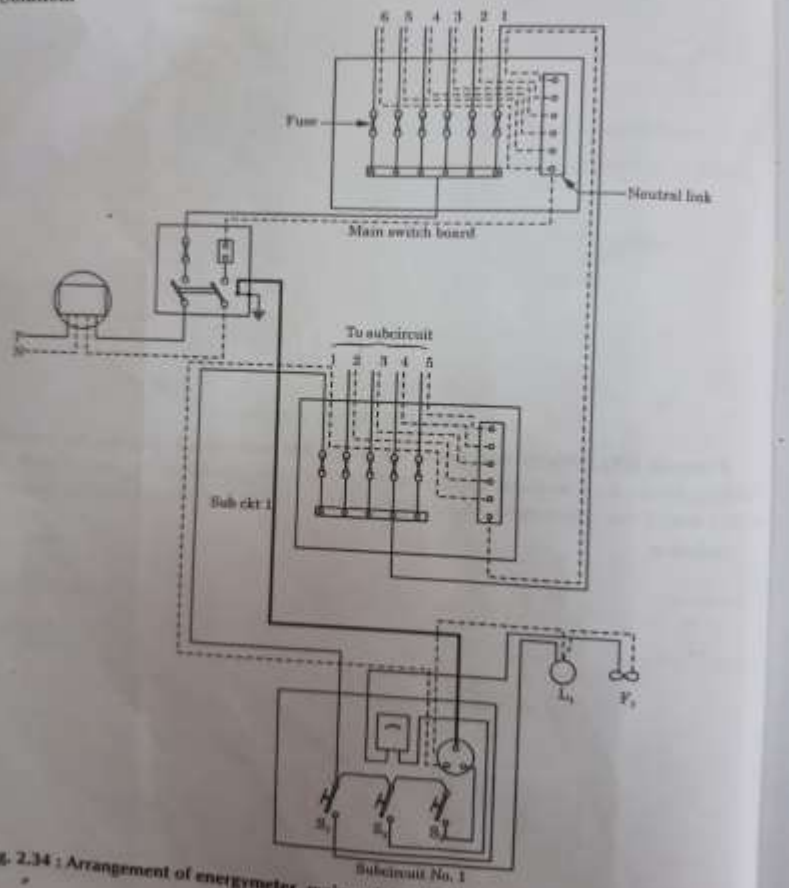

Fig. 2.34 : Arrangement of energymeter, main switch, distribution board and subcircuit

Wiring Diagram of MCB,Energy Meter,Main Switch and Four Subcircuit

Example 2.10. Draw single line and wiring diagram consisting of DPMCB, 5 SMP one ELCB, energymeter, main switch and four subcircuits.

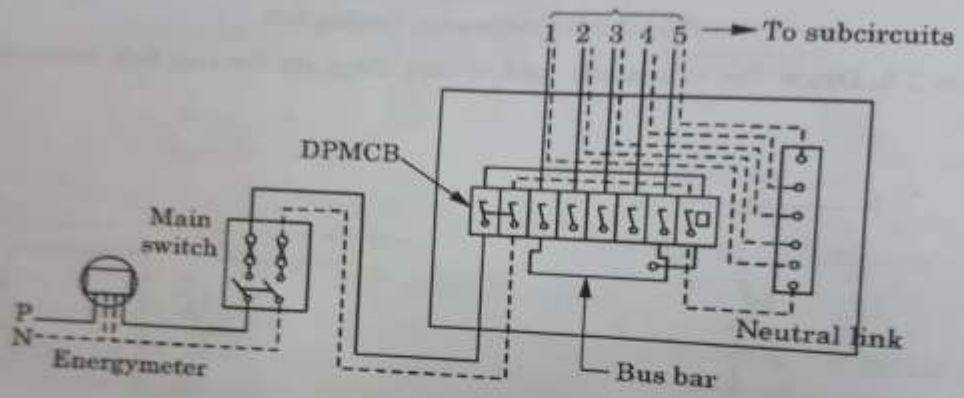

Fig. 2.29: Wiring diagram

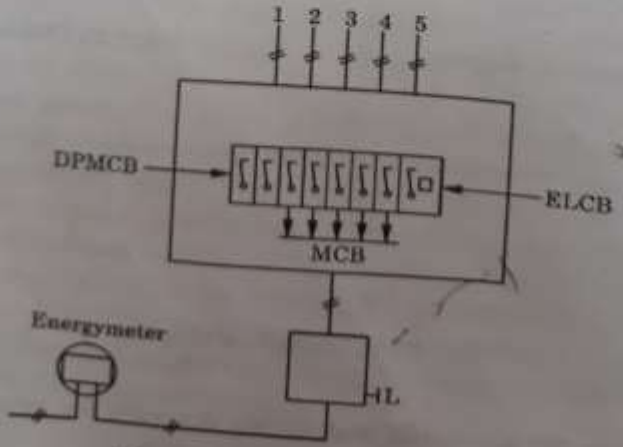

Fig. 2.30: Single line diagram

Wiring Diagram of Residential House

Wiring Diagram

Example 2.11. Draw the wiring diagram for a residential house. The circuit should consists of separate panels for lighting and power controls. Draw the circuit starting from energymeter, main switch etc. Show at least four subcircuits on each lighting and power circuits.

Solution.

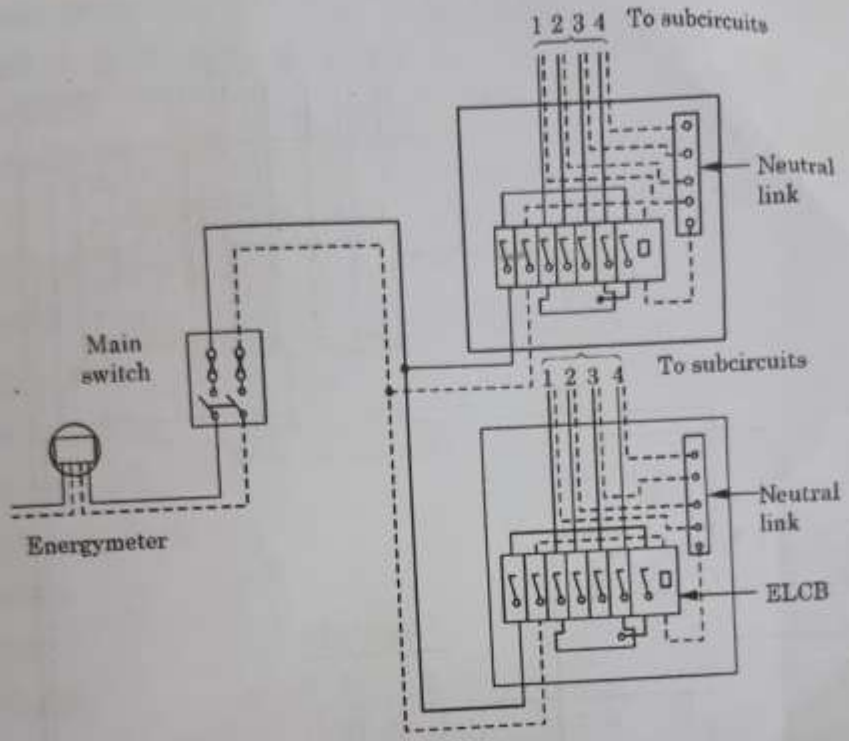

Fig. 2.31: Wiring diagram

Front view of Pin Type Insulator

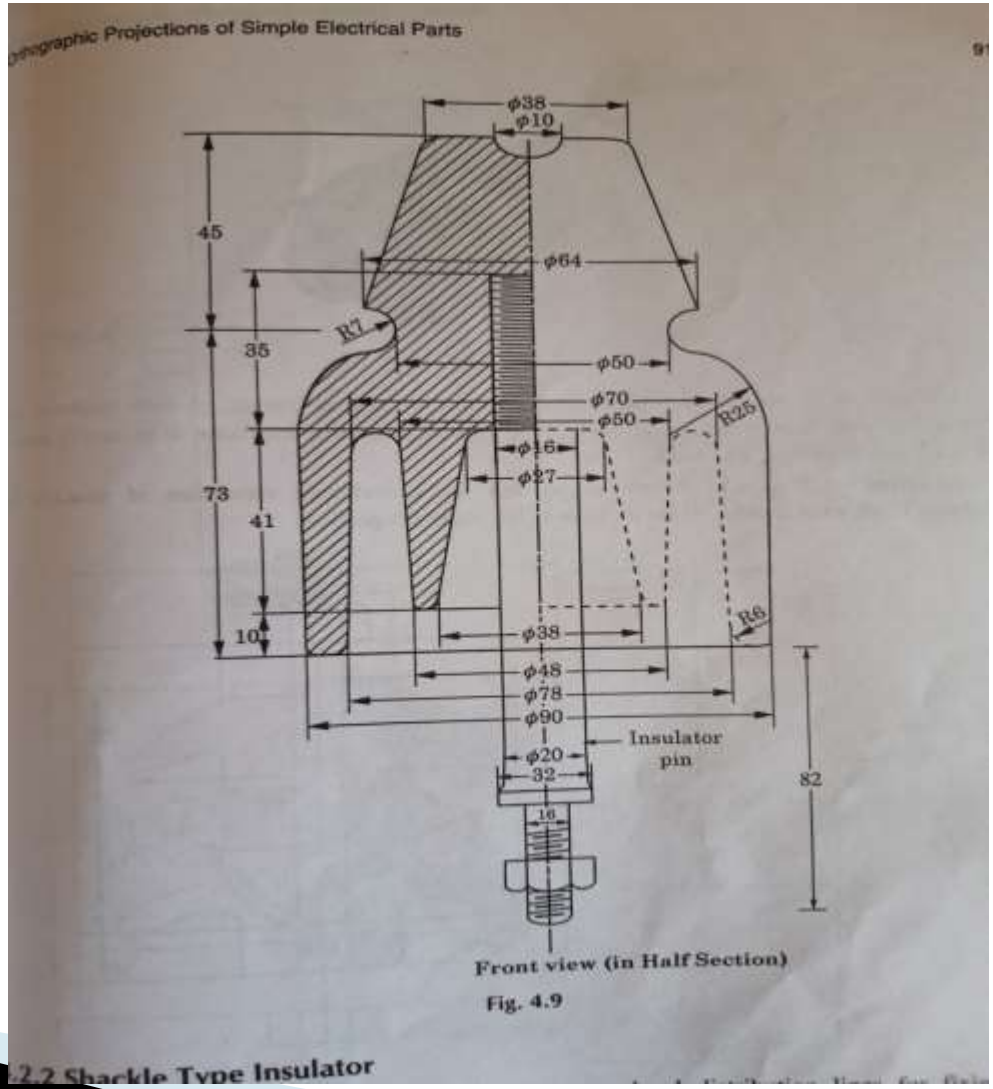

Earth Leakage Circuit Breaker

For satisfactory operation of MCB on a earth fault, it is essential that the resistance of earth electrode should be very low so as to cause the operating current to flow through the MCB. ELCB is arranged to operate at a low value of leakage current which is much smaller than the current required for working of MCB.

Phase and neutral wires of the circuit to be protected by ELCB are connected to a transformer as shown in Fig. 3.10. Another winding of the transformer controls the trip circuit. The contacts remain normally closed with the help of a spring mechanism.

If earth leakage occurs on any of the wires (Phase or neutral), the earth leakage current unbalances the phase current and neutral current. If this unbalance current becomes equal to the rated tripping current of ELCB, the trip mechanism operates to disconnect the circuit.

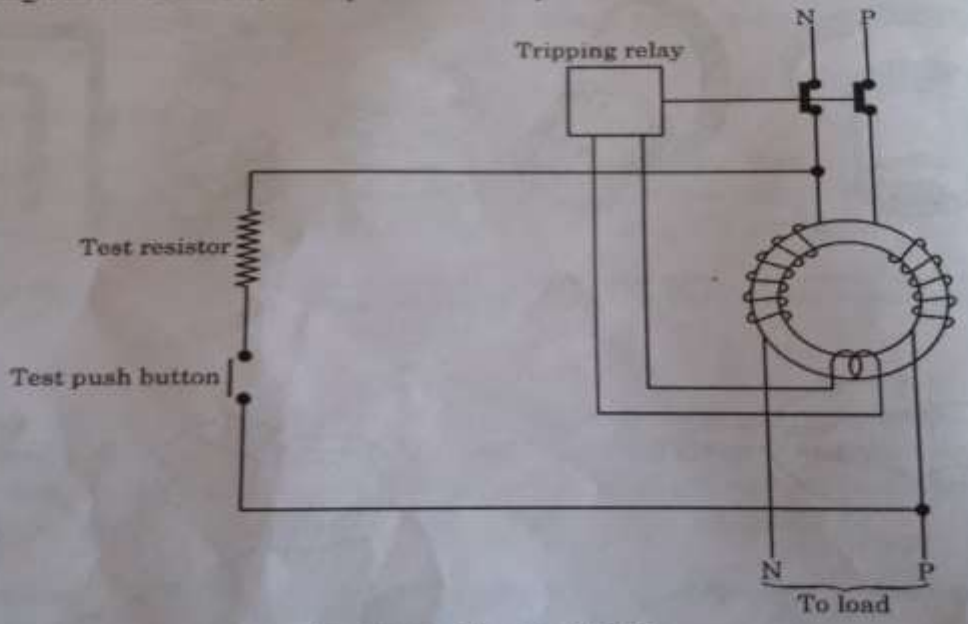

Fig. 3.10 : Circuit of ELCB

The ELCB should be periodically tested for it's working. For this purpose test push button provided in the circuit. The ELCB should operate when this push button is pressed.

THANK YOU